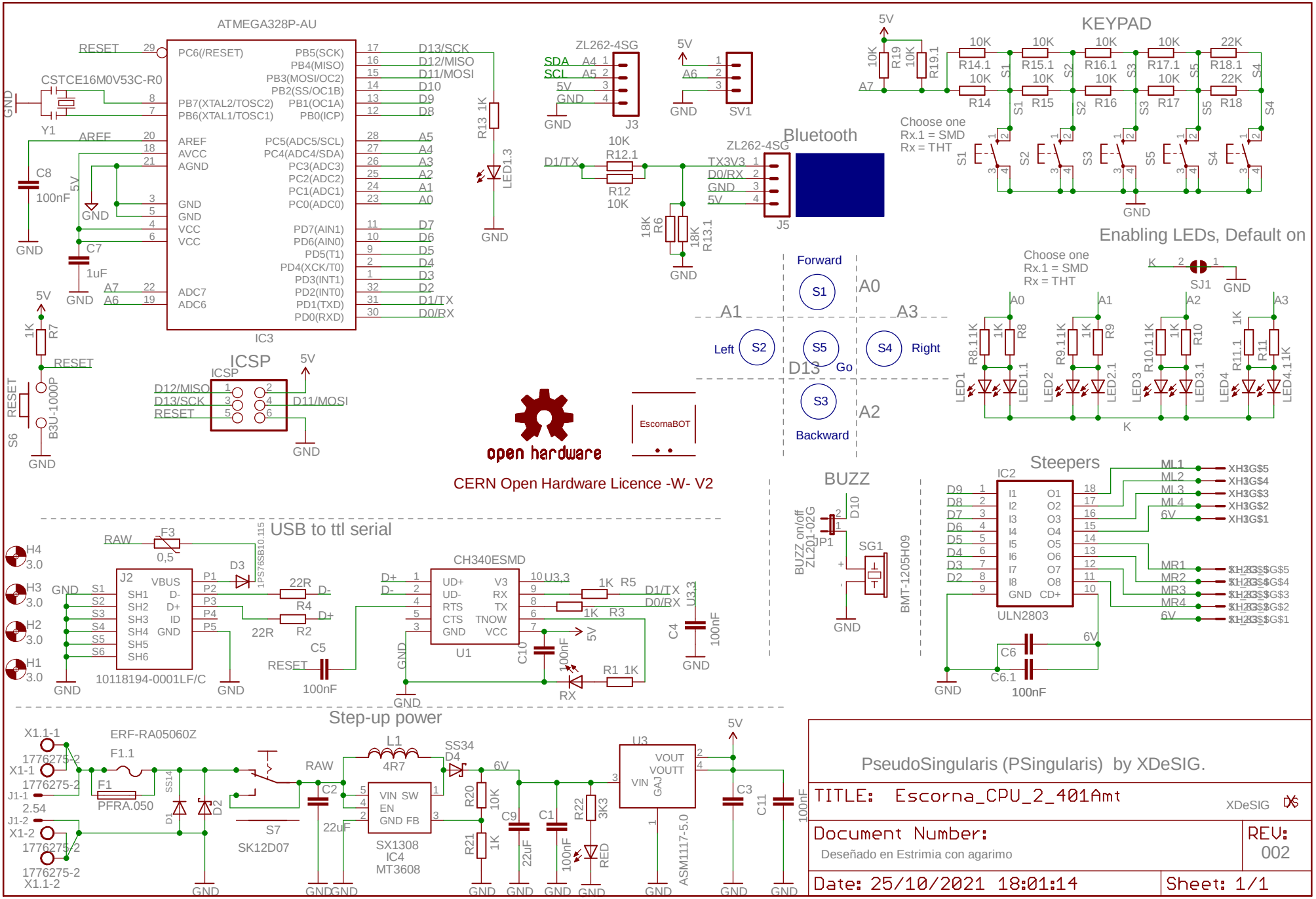
ATMEGA328P-AU
IC3
CSTCE16M0V53C-R0
Y1
C8
100nF
C7
1uF
R13 1K
LED1.3
ZL262-4SG
J3
SV1
ZL262-4SG
J5
Bluetooth
R12.1
R12
10K
18K
R6
18K
R13.1
KEYPAD
Choose one
Rx.1 = SMD
Rx = THT
Enabling LEDs, Default on
SJ1
ICSP
Forward
Left
Right
Backward
Go
EscornaBOT
open hardware
CERN Open Hardware Licence -W- V2
BUZZ
BUZZ on/off
ZL201-02G
JP1
SG1
BMT-1205H09
Steepers
IC2
ULN2803
USB to ttl serial
J2
10118194-0001LF/C
CH340ESMD
U1
Step-up power
ERF-RA05060Z
F1.1
F1
PFRA.050
S7
SK12D07
L1
4R7
SS34
D4
SX1308
IC4
MT3608
U3
ASM1117-5.0
PseudoSingularis (PSingularis) by XDeSIG.
TITLE: Escorna_CPU_2_401Amt
XDeSIG
Document Number:
Deseñado en Estrimia con agarimo
REV: 002
Date: 25/10/2021 18:01:14
Sheet: 1/1