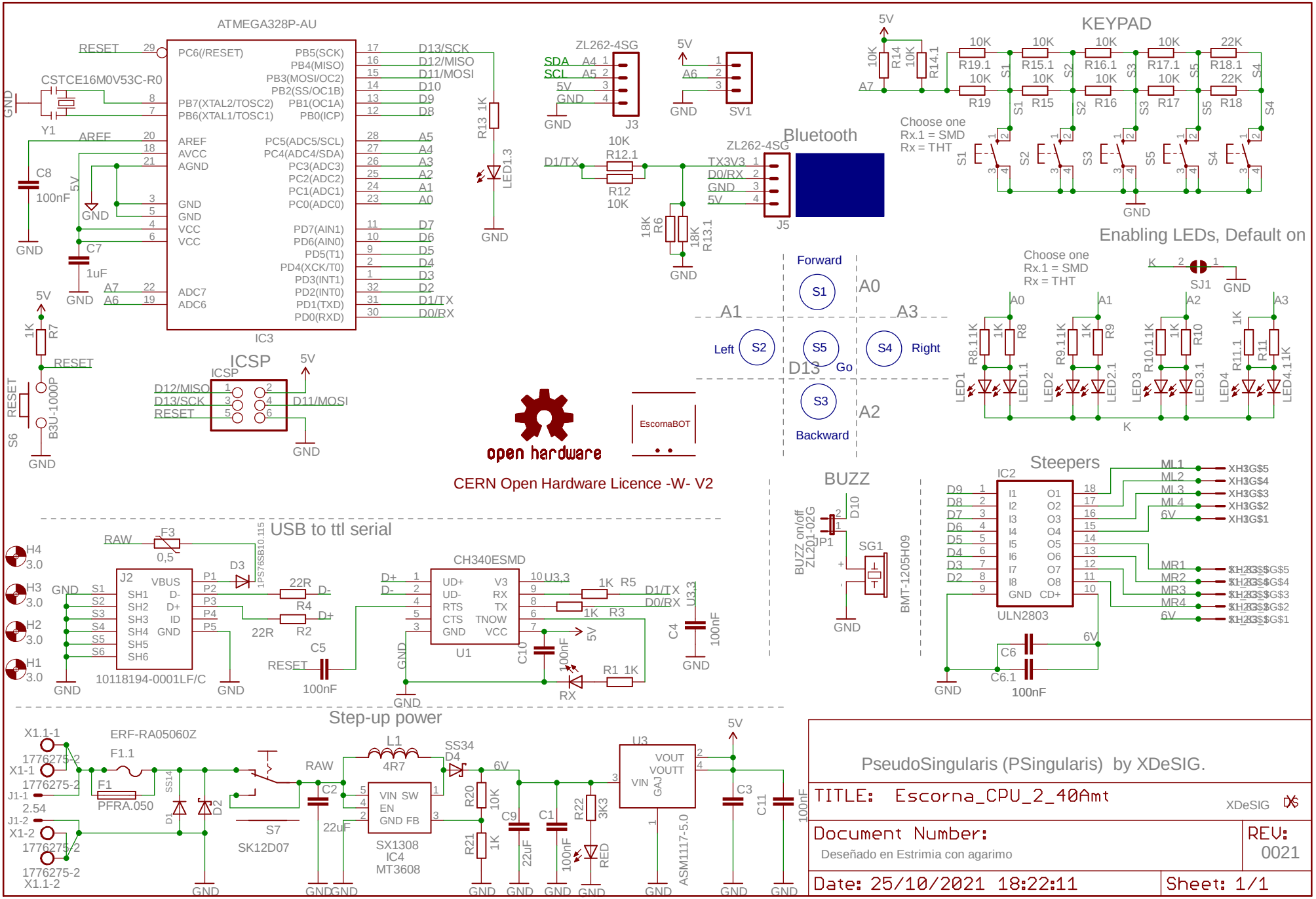
ATMEGA328P-AU
IC3
CSTCE16M0V53C-R0
Y1
C8 100nF
C7 1uF
R13 1K
LED1.3
ZL262-4SG
J3
SV1
Bluetooth
ZL262-4SG
J5
R12.1 10K
R12 10K
R6 18K
R13.1 18K
KEYPAD
Choose one
Rx.1 = SMD
Rx = THT
Enabling LEDs, Default on
SJ1
ICSP
RESET
B3U-1000P
S6
Forward
Left
Right
Go
Backward
S1
S2
S3
S4
S5
A0
A1
A2
A3
D13
open hardware
EscornaBOT
CERN Open Hardware Licence -W- V2
BUZZ
BUZZ on/off ZL201-02G
JP1
SG1
BMT-1205H09
Steepers
IC2
ULN2803
USB to ttl serial
F3 0,5
J2
10118194-0001LF/C
CH340ESMD
U1
C5 100nF
C4 100nF
Step-up power
ERF-RA05060Z
F1.1
F1 PFRA.050
S7 SK12D07
L1 4R7
SS34 D4
SX1308 IC4 MT3608
U3
ASM1117-5.0
C2 22uF
C3
C11 100nF
C9 22uF
C1 100nF
R22 3K3
RED
PseudoSingularis (PSingularis) by XDeSIG.
TITLE: Escorna_CPU_2_40Amt
XDeSIG
Document Number:
Deseñado en Estrimia con agarimo
REV: 0021
Date: 25/10/2021 18:22:11
Sheet: 1/1