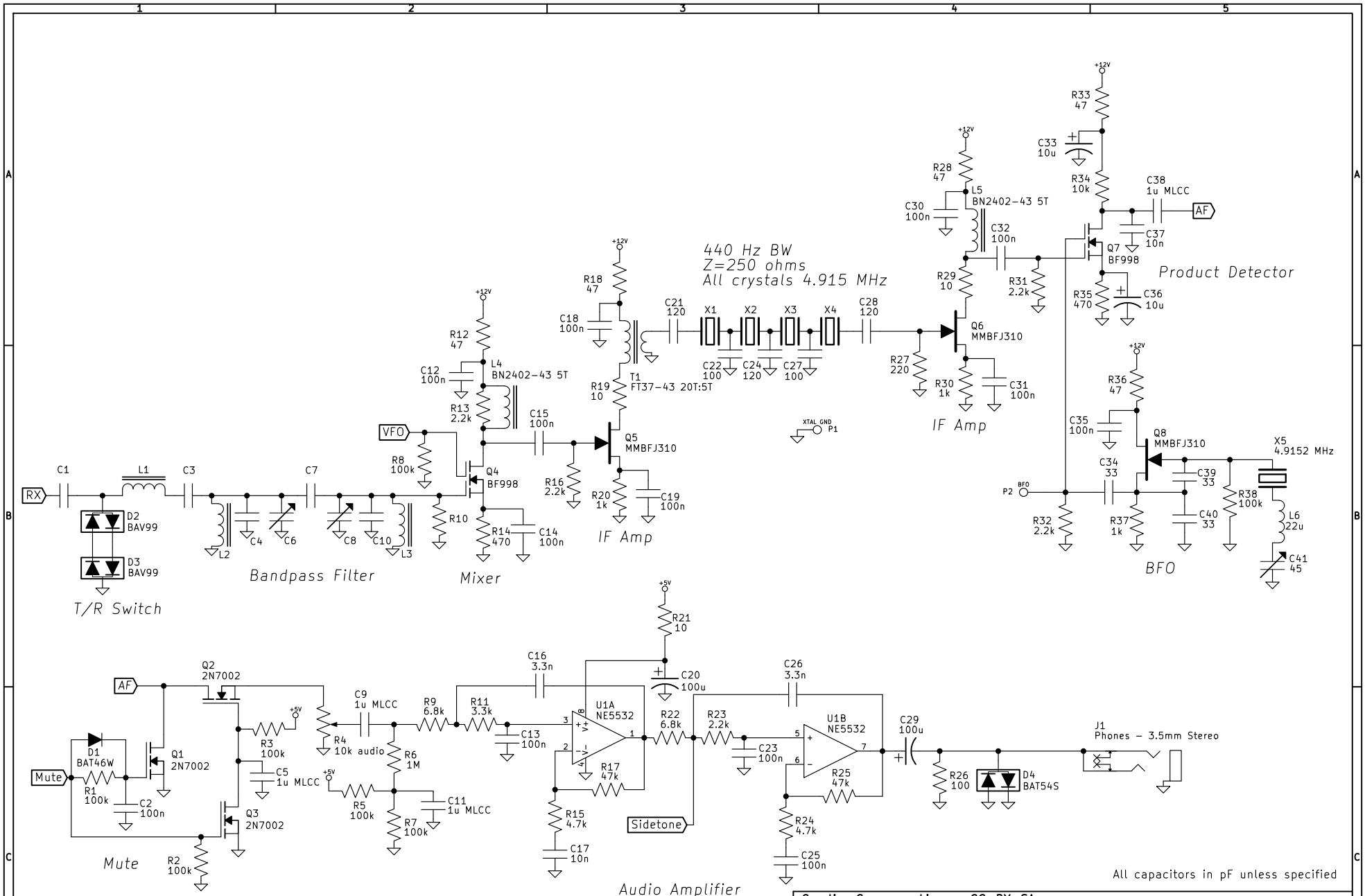

Creative Commons Licence CC-BY-SA

Etherkit

File: CC1RX.sch
Sheet: /Receiver/
Title: CC1 Transceiver

Size: A	*Date: 25 feb 2013*	*Rev: A*
KiCad E.D.A.		Id: 2/3

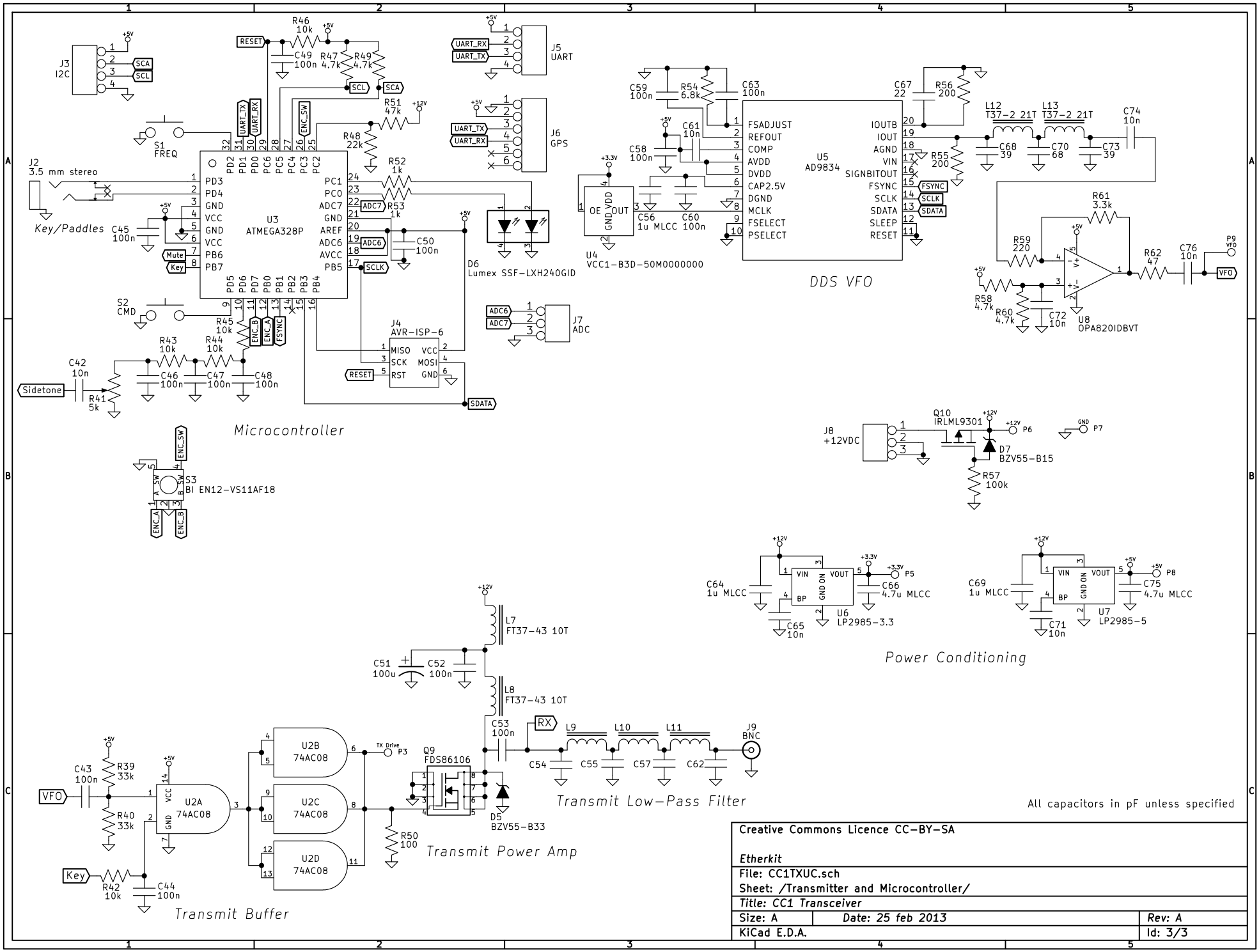

Creative Commons Licence CC-BY-SA

Etherkit

File: CC1TXUC.sch

Sheet: /Transmitter and Microcontroller/

Title: CC1 Transceiver

Size: A	*Date: 25 feb 2013*	*Rev: A*
KiCad E.D.A.		Id: 3/3