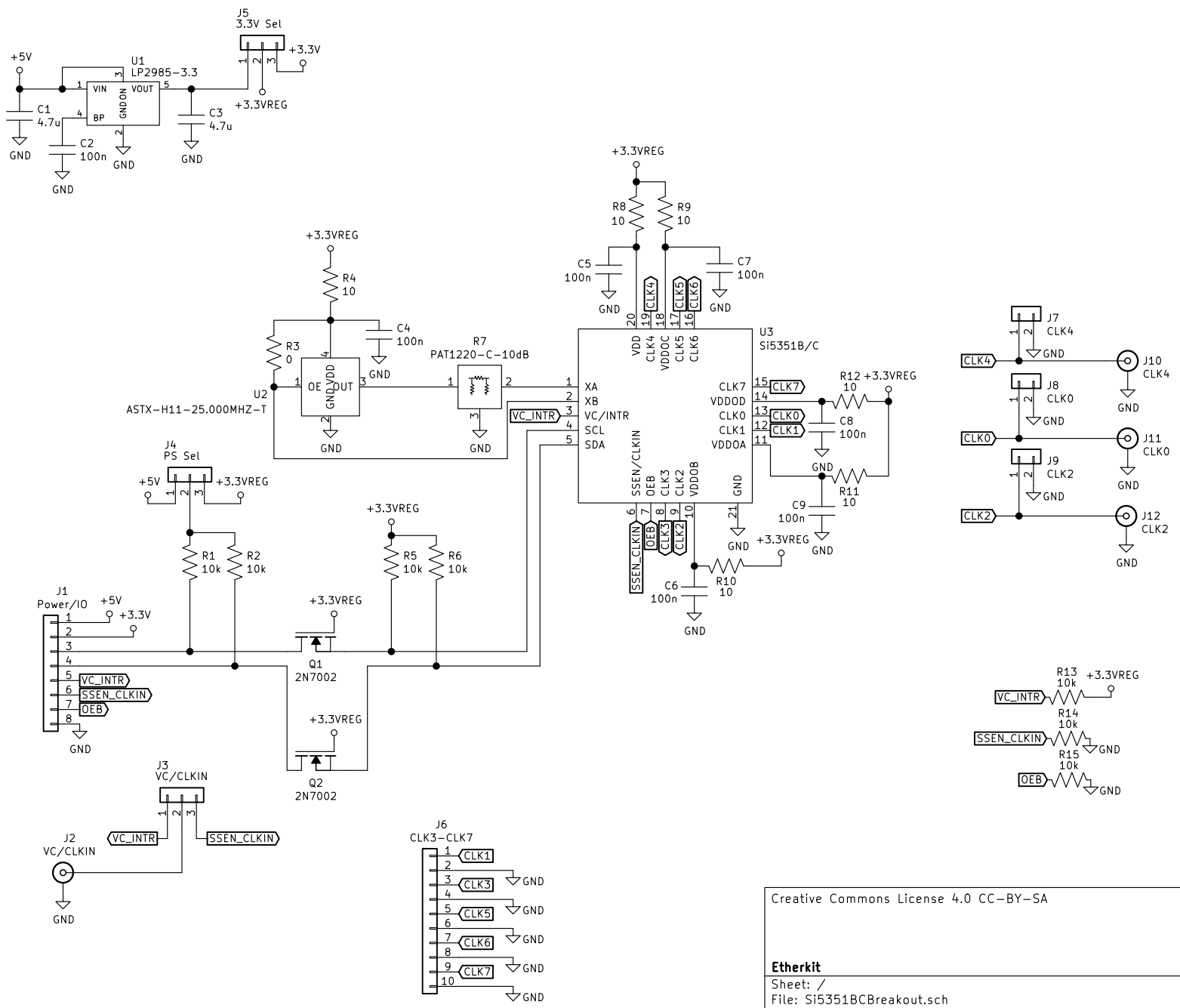

Creative Commons License 4.0 CC-BY-SA

Etherkit

Sheet: /

File: Si5351BCBreakout.sch

Title: Si5351B/C Breakout Board

Size: USLetter	Date: 2019-01-01	**Rev: A**
KiCad E.D.A. kicad 5.0.2-bee76a070ubuntu18.04.1		Id: 1/1