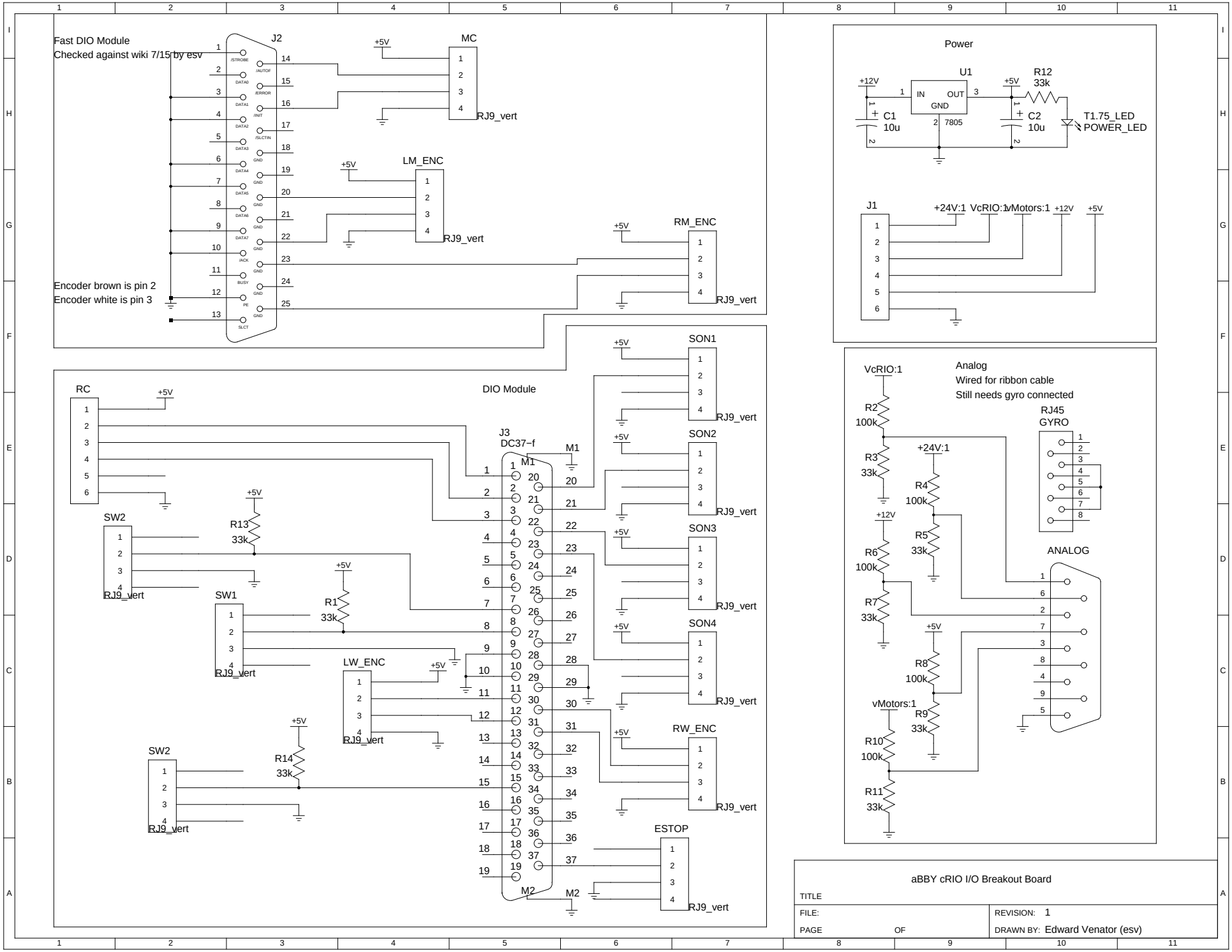
Fast DIO Module
Checked against wiki 7/15 by esv
J2
/STROBE
DATA0
DATA1
DATA2
DATA3
DATA4
DATA5
DATA6
DATA7
/ACK
BUSY
PE
SLCT
/AUTOF
/ERROR
/INIT
/SLCTIN
GND
MC
LM_ENC
RM_ENC
RJ9_vert
+5V
Encoder brown is pin 2
Encoder white is pin 3
Power
U1
IN
OUT
GND
7805
+12V
C1
10u
C2
10u
R12
33k
T1.75_LED
POWER_LED
J1
+24V:1
VcRIO:1
vMotors:1
DIO Module
RC
J3
DC37−f
M1
M2
SW1
SW2
R1
R13
R14
33k
LW_ENC
SON1
SON2
SON3
SON4
RW_ENC
ESTOP
Analog
Wired for ribbon cable
Still needs gyro connected
RJ45
GYRO
ANALOG
R2
R3
R4
R5
R6
R7
R8
R9
R10
R11
100k
aBBY cRIO I/O Breakout Board
TITLE
FILE:
PAGE
OF
REVISION: 1
DRAWN BY: Edward Venator (esv)