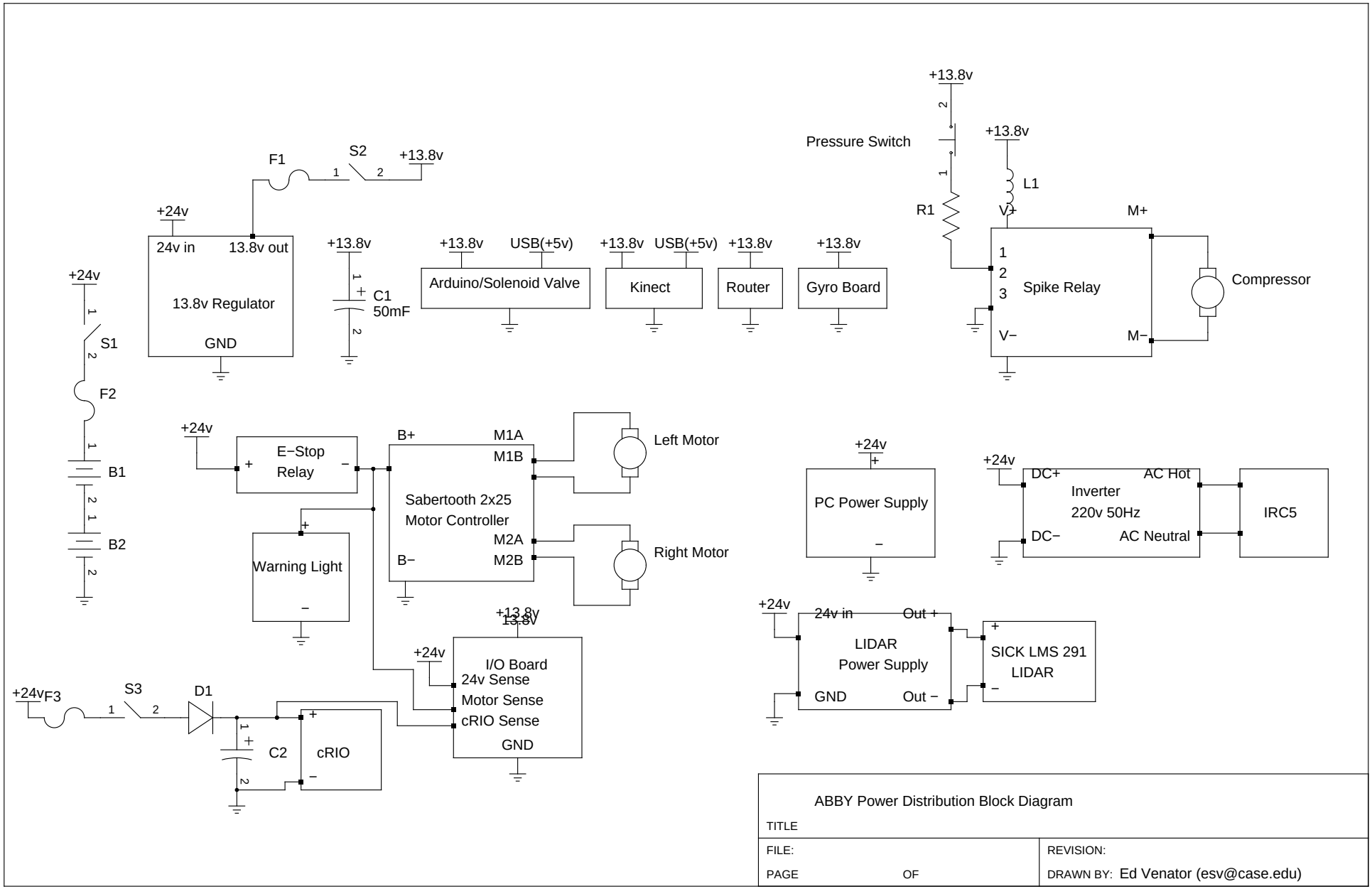
+24v
S1
F2
B1
B2
F1
S2
+13.8v
24v in
13.8v out
13.8v Regulator
GND
C1
50mF
+13.8v
USB(+5v)
Arduino/Solenoid Valve
Kinect
Router
Gyro Board
Pressure Switch
R1
L1
V+
V−
M+
M−
Spike Relay
Compressor
E−Stop
Relay
Warning Light
B+
B−
M1A
M1B
M2A
M2B
Sabertooth 2x25
Motor Controller
Left Motor
Right Motor
PC Power Supply
DC+
DC−
AC Hot
AC Neutral
Inverter
220v 50Hz
IRC5
24v in
Out +
Out −
LIDAR
Power Supply
SICK LMS 291
LIDAR
F3
S3
D1
C2
cRIO
I/O Board
24v Sense
Motor Sense
cRIO Sense
GND
ABBY Power Distribution Block Diagram
TITLE
FILE:
PAGE
OF
REVISION:
DRAWN BY: Ed Venator (esv@case.edu)