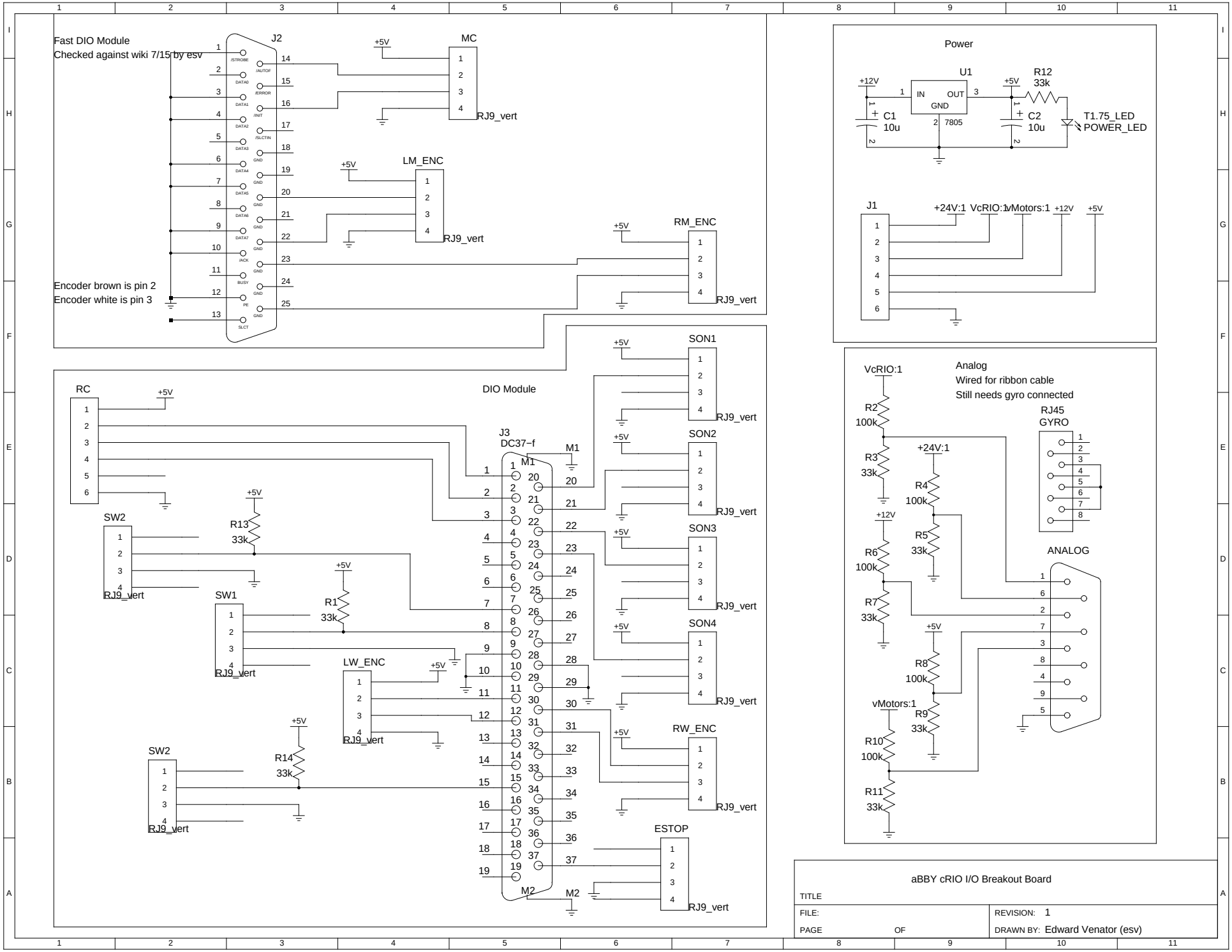
Fast DIO Module
Checked against wiki 7/15 by esv
J2
MC
LM_ENC
RM_ENC
RJ9_vert
Encoder brown is pin 2
Encoder white is pin 3
Power
U1
IN
OUT
GND
7805
+12V
+5V
C1
10u
C2
10u
R12
33k
T1.75_LED
POWER_LED
J1
+24V:1
VcRIO:1
vMotors:1
DIO Module
RC
J3
DC37−f
M1
M2
SW1
SW2
R1
R13
R14
33k
LW_ENC
RW_ENC
SON1
SON2
SON3
SON4
ESTOP
Analog
Wired for ribbon cable
Still needs gyro connected
RJ45
GYRO
ANALOG
R2
R3
R4
R5
R6
R7
R8
R9
R10
R11
100k
aBBY cRIO I/O Breakout Board
TITLE
FILE:
PAGE
OF
REVISION: 1
DRAWN BY: Edward Venator (esv)