Product manual

Articulated robot

IRB 120 - 3/0.6

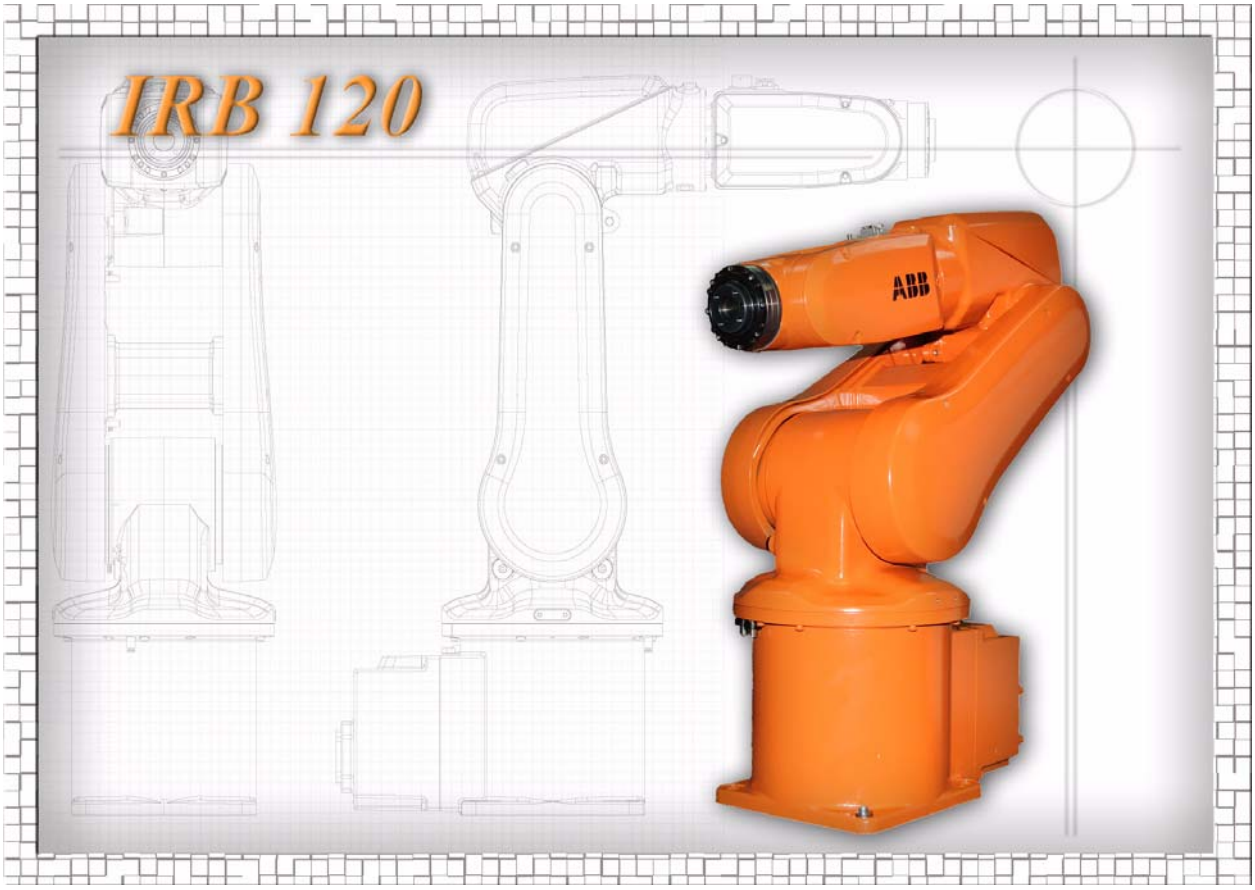

Product manual

IRB 120 - 3/0.6

M2004

Document ID: 3HAC035728-001

Revision: B

© Copyright 2009-2010 ABB. All rights reserved.

The information in this manual is subject to change without notice and should not be construed as a commitment by ABB. ABB assumes no responsibility for any errors that may appear in this manual.

Except as may be expressly stated anywhere in this manual, nothing herein shall be construed as any kind of guarantee or warranty by ABB for losses, damages to persons or property, fitness for a specific purpose or the like.

In no event shall ABB be liable for incidental or consequential damages arising from use of this manual and products described herein.

This manual and parts thereof must not be reproduced or copied without ABB's written permission, and contents thereof must not be imparted to a third party nor be used for any unauthorized purpose. Contravention will be prosecuted.

Additional copies of this manual may be obtained from ABB at its then current charge.

Copyright 2009-2010 ABB All rights reserved.

ABB AB
Robotics Products
SE-721 68 Västerås
Sweden

© Copyright 2009-2010 ABB. All rights reserved.

Overview of this manual. 7
Product documentation, M2004 11
How to read the product manual. 13

1 Safety 15

1.1 Introduction to safety information 15
1.2 General safety information. 16
1.2.1 Safety in the manipulator system 16
1.2.2 Safety risks 17
1.2.2.1 Safety risks during installation and service work on manipulators. 17
1.2.2.2 CAUTION - Hot parts may cause burns! 19
1.2.2.3 Safety risks related to tools/workpieces 20
1.2.2.4 Safety risks related to pneumatic/hydraulic systems. 21
1.2.2.5 Safety risks during operational disturbances. 22
1.2.2.6 Risks associated with live electric parts 23
1.2.3 Safety actions 24
1.2.3.1 Safety fence dimensions 24
1.2.3.2 Fire extinguishing 25
1.2.3.3 Emergency release of the manipulator’s arm 26
1.2.3.4 Brake testing 27
1.2.3.5 Risk of disabling function "Reduced speed 250 mm/s" 28
1.2.3.6 Safe use of the FlexPendant 29
1.2.3.7 Work inside the manipulator's working range 30
1.2.4 Safety stops. 31
1.2.4.1 What is an emergency stop? 31
1.3 Safety related instructions 33
1.3.1 Safety signals in the manual 33
1.3.2 Safety symbols on the manipulator labels 35
1.3.3 DANGER - Moving manipulators are potentially lethal! 39
1.3.4 DANGER - First test run may cause injury or damage! 40
1.3.5 WARNING - The unit is sensitive to ESD! 41
1.3.6 WARNING - Safety risks during work with gearbox lubricants (oil or grease) 43

2 Installation and commissioning 45

2.1 Introduction 45
2.2 Unpacking 46
2.2.1 Pre-installation procedure. 46
2.2.2 Working range and type of motion. 49
2.2.3 Risk of tipping/Stability 51
2.3 On-site installation 52
2.3.1 Lifting the robot with roundslings 52
2.3.2 Manually releasing the brakes 55
2.3.3 Orienting and securing the robot 58
2.3.4 Fitting equipment on robot. 61
2.3.5 Suspended mounting 64
2.3.6 Loads 66
2.4 Restricting the working range 67
2.4.1 Introduction 67
2.4.2 Mechanically restricting the working range. 68
2.5 Electrical connections 70
2.5.1 Robot cabling and connection points 70
2.5.2 Customer connections on robot 71

© Copyright 2009-2010 ABB. All rights reserved.

3 Maintenance **73**
3.1 Introduction . . . 73
3.2 Maintenance schedule and expected component life . . . 74
3.2.1 Specification of maintenance intervals . . . 74
3.2.2 Maintenance schedule . . . 75
3.2.3 Expected component life . . . 76
3.3 Inspection activities . . . 77
3.3.1 Inspection, robot cabling . . . 77
3.3.2 Inspecting mechanical stops . . . 78
3.3.3 Inspecting dampers . . . 81
3.3.4 Inspecting timing belts . . . 83
3.3.5 Inspecting plastic covers . . . 85
3.4 Replacement/changing activities . . . 87
3.4.1 Type of grease in gearboxes . . . 87
3.4.2 Replacing the battery pack . . . 89
3.5 Cleaning activities . . . 91
3.5.1 Cleaning, robot . . . 91

4 Repair **93**
4.1 Introduction . . . 93
4.2 General procedures . . . 94
4.2.1 Mounting instructions for seals . . . 94
4.3 Cable harness . . . 96
4.3.1 Removing the cable harness . . . 96
4.3.2 Refitting the cable harness . . . 107
4.3.3 Replacing the Encoder Interface board . . . 116
4.4 Plastic covers . . . 119
4.4.1 Replacing plastic covers . . . 119
4.5 Upper arm . . . 122
4.5.1 Replacing the upper arm . . . 122
4.6 Lower arm . . . 129
4.6.1 Replacing the lower arm . . . 129
4.7 Motors and motors with gearboxes . . . 133
4.7.1 Replacing motor axis 1 with gearbox . . . 133
4.7.2 Replacing motor axis 2, with gearbox . . . 143
4.7.3 Replacing motor axis 3 . . . 152
4.7.4 Replacing motor axis 4, with gearbox . . . 159
4.7.5 Replacing motor axis 5 . . . 160
4.7.6 Replacing motor axis 6 . . . 166
4.8 Gearboxes . . . 167
4.8.1 Replacing gearbox axis 1 . . . 167
4.8.2 Replacing gearbox axis 2 . . . 168
4.8.3 Replacing gearbox axis 3 . . . 169
4.8.4 Replacing gearbox axis 4 . . . 170
4.8.5 Replacing gearbox axis 5 . . . 171
4.8.6 Replacing gearbox axis 6 . . . 172

5 Calibration **173**
5.1 Introduction . . . 173
5.2 Calibrating axes 1 - 6 . . . 174
5.3 Synchronization marks axes 1-6 . . . 180

© Copyright 2009-2010 ABB. All rights reserved.

6 Decommissioning **183**

6.1 Introduction 183
6.2 Environmental information. 184

7 Reference information **185**

7.1 Introduction 185
7.2 Applicable safety standards 186
7.3 Unit conversion. 188
7.4 Screw joints 189
7.5 Weight specifications 190
7.6 Standard toolkit. 191
7.7 Special tools 192
7.8 Lifting equipment and lifting instructions 193

8 Spare parts **195**

8.1 Spare parts - Axes 1 and 2 195
8.2 Spare parts - Axis 3 197
8.3 Spare parts - Lower arm, side support 199
8.4 Spare parts - Upper arm unit. 201
8.5 Spare parts - Wrist unit. 203
8.6 Spare parts - Cable harness. 205

9 Circuit diagram **207**

9.1 About circuit diagrams 207

Index **209**

© Copyright 2009-2010 ABB. All rights reserved.

© Copyright 2009-2010 ABB. All rights reserved.

Overview of this manual

About this manual

This manual contains instructions for:

- mechanical and electrical installation of the robot
- maintenance of the robot
- mechanical and electrical repair of the robot.

Usage

This manual should be used during:

- installation, from lifting the robot to its work site and securing it to the foundation, to making it ready for operation
- maintenance work
- repair work and calibration.

Who should read this manual?

This manual is intended for:

- installation personnel
- maintenance personnel
- repair personnel.

Prerequisites

A maintenance/repair/installation craftsman working with an ABB Robot must:

- be trained by ABB and have the required knowledge of mechanical and electrical installation/repair/maintenance work.

© Copyright 2009-2010 ABB. All rights reserved.

Continues on next page

Organization of chapters

The manual is organized in the following chapters:

Chapter	Contents
Safety	Safety information that must be read through before performing any installation or service work on the robot. Contains general safety aspects as well as more specific information on how to avoid personal injuries and damage to the product.
Installation and commissioning	Required information about lifting and installation of the robot.
Maintenance	Step-by-step procedures that describe how to perform maintenance of the robot. Based on a maintenance schedule that may be used to plan periodical maintenance.
Repair	Step-by-step procedures that describe how to perform repair activities of the robot. Based on available spare parts.
Calibration information	Procedures that do not require specific calibration equipment. General information about calibration.
Decommissioning	Environmental information about the robot and its components.
Reference information	Useful information when performing installation, maintenance or repair work. Includes lists of necessary tools, additional documents, safety standards etc.
Spare part / part list	Complete spare part list and complete list of robot components, shown in exploded views.
Exploded views	Detailed illustrations of the robot with reference numbers to the part list.
Circuit diagram	Reference to the circuit diagram for the robot..

References

Reference	Document ID
Product specification - IRB 120	3HAC035960-001
Product manual - IRC5	3HAC021313-001
Product manual - IRC5 Compact	3HAC035738-001
Product manual - Panel Mounted Controller	3HAC027707-001
Operating manual - IRC5 with FlexPendant	3HAC16590-1
Emergency safety information	3HAC027098-001 Same document number regardless of language.
General safety information	3HAC031045-001

© Copyright 2009-2010 ABB. All rights reserved.

Continues on next page

Revisions

Revision	Description
-	First edition
A	This revision includes the following additions and/or changes: • Section "*Product documentation, M2004*" added. • Section "*How to read the product manual*" added. • **Safety chapter-** Updated safety signal graphics for levels Danger! and Warning! See section *Safety signals in the manual on page 33*. • **Safety chapter** - New safety labels on the manipulators, see *Safety symbols on the manipulator labels on page 35*. • **Safety chapter**- Revised terminology: *robot* replaced with *manipulator*. • **Safety chapter** - Information not applicable to IRB 120 in *WARNING - Safety risks during work with gearbox lubricants (oil or grease) on page 43* removed. • **Installation chapter**- Illustration updated in *Risk of tipping/Stability on page 51*. • **Installation chapter**- Attachment screws added in *Lifting the robot with roundslings on page 52*. • **Installation chapter**- Value in illustration updated in *Orienting and securing the robot on page 58*. • **Installation chapter** - Section *Suspended mounting on page 64* new. • **Installation chapter** - Section *Robot cabling and connection points on page 70* updated. • **Installation chapter** - Section *Customer connections on robot on page 71* art. no. on connection at upper arm updated. • **Maintenance chapter** - Value for timing belt tension axis 5 updated. • **Repair chapter** - New chapter. • **Calibration chapter** - Section *Calibrating axes 1 - 6 on page 174* updated. • **Calibration chapter** - Section *Synchronization marks axes 1-6 on page 180* updated. • **Reference information chapter** - New chapter. • **Spare parts chapter** - Article numbers and illustrations updated.

© Copyright 2009-2010 ABB. All rights reserved.

Continues on next page

Continued

Revision	Description
B	This revision includes the following additions and/or changes: • **Installation chapter** - Lifting capacity of roundslings updated. See: *Lifting the robot with roundslings on page 52*. • **Installation chapter** - New illustration showing IRB 120 added. See: *Suspended mounting on page 64*. • **Repair chapter** - Illustrations xx0900001009 and xx0900000782 updated. See: *Removing the cable harness on page 96* and *Refitting the cable harness on page 107*. • **Repair chapter** - Illustration xx0900000924 updated. See: *Replacing the upper arm on page 122*. • **Repair chapter** - Motor axis 4 now delivered as part of the upper arm. The procedures Removal and Refitting are updated accordingly. See: *Replacing the upper arm on page 122*. • **Repair chapter** - Motor axis 4 now delivered as part of the upper arm. The section is updated accordingly. See: *Replacing motor axis 4, with gearbox on page 159*. • **Repair chapter** - Illustration xx0900001009 updated. See: *Replacing motor axis 5 on page 160*. • **Calibration chapter** updated. See sections: *Calibrating axes 1 - 6 on page 174* and *Synchronization marks axes 1-6 on page 180*. • **Reference information chapter** - "*Other standards*" added. See: *Applicable safety standards on page 186*. • **Reference information chapter** - Standard toolkit updated. See: *Standard toolkit on page 191*. • **Spare parts chapter** - Motor axis 4 (art. no. 3HAC037282-001) removed. Now part of the upper arm. See: *Spare parts - Upper arm unit on page 201*. • **Circuit diagram** - Updated after circuit diagrams now are delivered as separate files. See: *About circuit diagrams on page 207*.

© Copyright 2009-2010 ABB. All rights reserved.

Product documentation, M2004

Categories for manipulator documentation

The manipulator documentation is divided into a number of categories. This listing is based on the type of information in the documents, regardless of whether the products are standard or optional.

All documents listed can be ordered from ABB on a DVD. The documents listed are valid for M2004 manipulator systems.

Product manuals

All hardware, manipulators and controllers will be delivered with a **Product manual** that contains:

- Safety information.
- Installation and commissioning (descriptions of mechanical installation, electrical connections).
- Maintenance (descriptions of all required preventive maintenance procedures including intervals).
- Repair (descriptions of all recommended repair procedures including spare parts).
- Additional procedures, if any (calibration, decommissioning).
- Reference information (article numbers for documentation referred to in Product manual, procedures, lists of tools, safety standards).
- Parts list.
- Foldouts or exploded views.
- Circuit diagrams (or references to circuit diagrams).

Technical reference manuals

The technical reference manuals describe the manipulator software in general and contain relevant reference information.

- **RAPID Overview**: An overview of the RAPID programming language.
- **RAPID Instructions, Functions and Data types**: Description and syntax for all RAPID instructions, functions, and data types.
- **RAPID Kernel**: A formal description of the RAPID programming language.
- **System parameters**: Description of system parameters and configuration workflows.

Application manuals

Specific applications (for example software or hardware options) are described in **Application manuals**. An application manual can describe one or several applications.

An application manual generally contains information about:

- The purpose of the application (what it does and when it is useful).
- What is included (for example cables, I/O boards, RAPID instructions, system parameters, CD with PC software).
- How to use the application.
- Examples of how to use the application.

Continues on next page

© Copyright 2009-2010 ABB. All rights reserved.

Operating manuals

The operating manuals describe hands-on handling of the products. The manuals are aimed at those having first-hand operational contact with the product, that is production cell operators, programmers, and trouble shooters.

The group of manuals includes:

- **Emergency safety information**
- **General safety information**
- **Getting started, IRC5 and RobotStudio**
- **IRC5 with FlexPendant**
- **RobotStudio**
- **Introduction to RAPID**
- **Trouble shooting**, for the controller and manipulator.

© Copyright 2009-2010 ABB. All rights reserved.

How to read the product manual

Reading the procedures

The procedures contain references to figures, tools, material, etc. The references are read as described below.

References to figures

The procedures often include references to components or attachment points located on the manipulator/controller. The components or attachment points are marked with *italic text* in the procedures and completed with a reference to the figure where the current component or attachment point is shown.

The denomination in the procedure for the component or attachment point corresponds to the denomination in the referenced figure.

The table below shows an example of a reference to a figure from a step in a procedure.

	Action	Note/Illustration
8.	Remove the *rear attachment screws, gearbox.*	Shown in the figure *Location of gearbox on page xx*.

References to required equipment

The procedures often include references to equipment (spare parts, tools, etc.) required for the different actions in the procedure. The equipment is marked with *italic text* in the procedures and completed with a reference to the section where the equipment is listed with further information, that is article number and dimensions.

The designation in the procedure for the component or attachment point corresponds to the designation in the referenced list.

The table below shows an example of a reference to a list of required equipment from a step in a procedure.

	Action	Note/Illustration
3.	Fit a new *sealing, axis 2* to the gearbox.	Art. no. is specified in *Required equipment on page xx*.

Safety information

The manual includes a separate safety chapter that must be read through before proceeding with any service or installation procedures. All procedures also include specific safety information when dangerous steps are to be performed.

Read more in the chapter *Safety on page 15*.

© Copyright 2009-2010 ABB. All rights reserved.

© Copyright 2009-2010 ABB. All rights reserved.

1 Safety

1.1. Introduction to safety information

Overview

The safety information in this manual is divided in two categories:

- General safety aspects, important to attend to before performing any service work on the robot. These are applicable for all service work and are found in *General safety information on page 16*.
- Specific safety information, pointed out in the procedures. How to avoid and eliminate the danger is either described directly in the procedure, or in specific instructions in the section *Safety related instructions on page 33*.

© Copyright 2009-2010 ABB. All rights reserved.

1.2 General safety information

1.2.1. Safety in the manipulator system

Validity and responsibility

The information does not cover how to design, install and operate a complete system, nor does it cover all peripheral equipment that can influence the safety of the total system. To protect personnel, the complete system must be designed and installed in accordance with the safety requirements set forth in the standards and regulations of the country where the manipulator is installed.

The users of ABB industrial manipulators are responsible for ensuring that the applicable safety laws and regulations in the country concerned are observed and that the safety devices necessary to protect people working with the manipulator system are designed and installed correctly. Personnel working with manipulators must be familiar with the operation and handling of the industrial manipulator as described in the applicable documents, for example:

- *Operating manual - IRC5 with FlexPendant*
- *Product manual*

Connection of external safety devices

Apart from the built-in safety functions, the manipulator is also supplied with an interface for the connection of external safety devices. Via this interface, an external safety function can interact with other machines and peripheral equipment. This means that control signals can act on safety signals received from the peripheral equipment as well as from the manipulator.

Limitation of liability

Any information given in this manual regarding safety must not be construed as a warranty by ABB that the industrial manipulator will not cause injury or damage even if all safety instructions are complied with.

Related information

Type of information	Detailed in document	Section
Installation of safety devices	Product manual for the manipulator	Installation and commissioning
Changing operating modes	Operating manual - IRC5 with FlexPendant	Operating modes
Restricting the working space	Product manual for the manipulator	Installation and commissioning

© Copyright 2009-2010 ABB. All rights reserved.

1.2.2. Safety risks

1.2.2.1. Safety risks during installation and service work on manipulators

Overview

This section includes information on general safety risks to be considered when performing installation and service work on the manipulator.

General risks during installation and service

- The instructions in the Product manual in the chapter *Installation and commissioning* must always be followed.
- Emergency stop buttons must be positioned in easily accessible places so that the manipulator can be stopped quickly.
- Those in charge of operations must make sure that safety instructions are available for the installation in question.
- Those who install the manipulator must have the appropriate training for the equipment in question and in any safety matters associated with it.

Nation/region specific regulations

To prevent injuries and damage during the installation of the manipulator, the regulations applicable in the country concerned and the instructions of ABB Robotics must be complied with.

Non-voltage related risks

- Safety zones, which must be crossed before admittance, must be set up in front of the manipulator's working space. Light beams or sensitive mats are suitable devices.
- Turntables or the like should be used to keep the operator out of the manipulator's working space.
- The axes are affected by the force of gravity when the brakes are released. In addition to the risk of being hit by moving manipulator parts, there is a risk of being crushed by the parallel arm (if there is one).
- Energy stored in the manipulator for the purpose of counterbalancing certain axes may be released if the manipulator, or parts thereof, are dismantled.
- When dismantling/assembling mechanical units, watch out for falling objects.
- Be aware of stored heat energy in the controller.
- Never use the manipulator as a ladder, that is, do not climb on the manipulator motors or other parts during service work. There is a risk of the manipulator being damaged.

To be observed by the supplier of the complete system

- The supplier of the complete system must ensure that all circuits used in the safety function are interlocked in accordance with the applicable standards for that function.
- The supplier of the complete system must ensure that all circuits used in the emergency stop function are interlocked in a safe manner, in accordance with the applicable standards for the emergency stop function.

Continues on next page

© Copyright 2009-2010 ABB. All rights reserved.

1.2.2.1. Safety risks during installation and service work on manipulators

Continued

Complete manipulator

Safety risk	Description
Hot components!	**CAUTION!** Motors and gears are HOT after running the manipulator! Touching motors and gears may result in burns! With a higher environment temperature, more surfaces on the manipulator will get HOT and may also result in burns.
Removed parts may result in collapse of manipulator!	**WARNING!** Take any necessary measures to ensure that the manipulator does not collapse as parts are removed, e.g. secure the lower arm with fixtures if removing motor, axis 2.

Cabling

Safety risk	Description
Cable packs are sensitive to mechanical damage!	**CAUTION!** The cable packs are sensitive to mechanical damage! They must be handled with care, especially the connectors, in order to avoid damaging them!

Gearboxes and motors

Safety risk	Description
Gears may be damaged if excessive force is used!	**CAUTION!** Whenever parting/mating motor and gearbox, the gears may be damaged if excessive force is used!

© Copyright 2009-2010 ABB. All rights reserved.

1.2.2.2. CAUTION - Hot parts may cause burns!

Description

During normal operation, many manipulator parts become hot, especially the drive motors and gears. Sometimes areas around these parts also become hot. Touching these may cause burns of various severity.

Because of a higher environment temperature, more surfaces on the manipulator get hot and may result in burns.

Elimination

The instructions below detail how to avoid the dangers specified above:

	Action	Info
1.	Always use your hand, at some distance, to feel if heat is radiating from the potentially hot component before actually touching it.	
2.	Wait until the potentially hot component has cooled if it is to be removed or handled in any other way.	

© Copyright 2009-2010 ABB. All rights reserved.

1.2.2.3. Safety risks related to tools/workpieces

Safe handling

It must be possible to safely turn off tools, such as milling cutters, etc. Make sure that guards remain closed until the cutters stop rotating.

It should be possible to release parts by manual operation (valves).

Safe design

Grippers/end effectors must be designed so that they retain workpieces in the event of a power failure or a disturbance to the controller.

CAUTION!

Ensure that a gripper is prevented from dropping a workpiece, if such is used.

© Copyright 2009-2010 ABB. All rights reserved.

1.2.2.4. Safety risks related to pneumatic/hydraulic systems

General

Special safety regulations apply to pneumatic and hydraulic systems.

Residual energy

- Residual energy can be present in these systems. After shutdown, particular care must be taken.
- The pressure in pneumatic and hydraulic systems must be released before starting to repair them.

Safe design

- Gravity may cause any parts or objects held by these systems to drop.
- Dump valves should be used in case of emergency.
- Shot bolts should be used to prevent tools, etc., from falling due to gravity.

© Copyright 2009-2010 ABB. All rights reserved.

1.2.2.5. Safety risks during operational disturbances

General

- The industrial manipulator is a flexible tool that can be used in many different industrial applications.
- All work must be carried out professionally and in accordance with the applicable safety regulations.
- Care must be taken at all times.

Qualified personnel

Corrective maintenance must only be carried out by qualified personnel who are familiar with the entire installation as well as the special risks associated with its different parts.

Extraordinary risks

If the working process is interrupted, extra care must be taken due to risks other than those associated with regular operation. Such an interruption may have to be rectified manually.

© Copyright 2009-2010 ABB. All rights reserved.

1.2.2.6. Risks associated with live electric parts

Voltage related risks, general

- Although troubleshooting may, on occasion, need to be carried out while the power supply is turned on, the robot must be turned off (by setting the mains switch to OFF) when repairing faults, disconnecting electric leads and disconnecting or connecting units.
- The mains supply to the robot must be connected in such a way that it can be turned off from outside the robot's working space.

Voltage related risks, IRC5 Compact controller

A danger of high voltage is associated with, for example, the following parts:

- Be aware of stored electrical energy (DC link, Ultracapacitor bank unit) in the controller.
- Units such as I/O modules, can be supplied with power from an external source.
- The mains supply/mains switch
- The transformers
- The power unit
- The control power supply (230 VAC)
- The rectifier unit (400-480 VAC and 700 VDC. Note: Capacitors!)
- The drive unit (700 VDC)
- The drive system power supply (230 VAC)
- The service outlets (115/230 VAC)
- The customer power supply (230 VAC)
- The power supply unit for additional tools, or special power supply units for the machining process.
- The external voltage connected to the controller remains live even when the robot is disconnected from the mains.
- Additional connections.

Voltage related risks, manipulator

A danger of high voltage is associated with the manipulator in:

- The power supply for the motors (up to 800 VDC).
- The user connections for tools or other parts of the installation (max. 230 VAC, see the chapter *Installation and commissioning* in the Product manual).

Voltage related risks, tools, material handling devices, etc.

Tools, material handling devices, etc., may be live even if the robot system is in the OFF position. Power supply cables which are in motion during the working process may be damaged.

© Copyright 2009-2010 ABB. All rights reserved.

1.2.3. Safety actions

1.2.3.1. Safety fence dimensions

General

Install a safety cell around the manipulator to ensure safe manipulator installation and operation.

Dimensioning

Dimension the fence or enclosure to enable it to withstand the force created if the load being handled by the manipulator is dropped or released at maximum speed. Determine the maximum speed from the maximum velocities of the manipulator axes and from the position at which the manipulator is working in the work cell (see the section *Robot motion* in the *Product specification*).

Also consider the maximum possible impact caused by a breaking or malfunctioning rotating tool or other device fitted to the manipulator.

© Copyright 2009-2010 ABB. All rights reserved.

1.2.3.2. Fire extinguishing

NOTE!

Use a CARBON DIOXIDE (CO_2) extinguisher in the event of a fire in the manipulator system (manipulator or controller)!

© Copyright 2009-2010 ABB. All rights reserved.

1.2.3.3. Emergency release of the manipulator’s arm

Description

In an emergency situation, any of the manipulator's axes may be released manually by pushing the brake release buttons .

How to release the brakes is detailed in the section:

- *Manually releasing the brakes on page 55*.

The manipulator arm may be moved manually on smaller manipulator models, but larger models may require using an overhead crane or similar equipment.

Increased injury

Before releasing the brakes, make sure that the weight of the arms does not increase the pressure on the trapped person, further increasing any injury!

© Copyright 2009-2010 ABB. All rights reserved.

1.2.3.4. Brake testing

When to test

During operation the holding brake of each axis motor is normally worn down. A test can be performed to determine whether the brake can still perform its function.

How to test

The function of the holding brake of each axis motor may be checked as detailed below:

1. Run each manipulator axis to a position where the combined weight of the manipulator arm and any load is maximized (max. static load).
2. Switch the motor to the MOTORS OFF position with the Operating mode selector on the controller.
3. Check that the axis maintains its position.

   If the manipulator does not change position as the motors are switched off, then the brake function is adequate.

© Copyright 2009-2010 ABB. All rights reserved.

1.2.3.5. Risk of disabling function "Reduced speed 250 mm/s"

NOTE!

Do not change *Transm gear ratio* or other kinematic system parameters from the FlexPendant or a PC. This will affect the safety function "Reduced speed 250 mm/s".

© Copyright 2009-2010 ABB. All rights reserved.

1.2.3.6. Safe use of the FlexPendant

NOTE!

The enabling device is a push-button located on the side of the FlexPendant which, when pressed halfway in, takes the system to MOTORS ON. When the enabling device is released or pushed all the way in, the manipulator is taken to the MOTORS OFF state.

To ensure safe use of the FlexPendant, the following must be implemented:

- The enabling device must never be rendered inoperational in any way.
- During programming and testing, the enabling device must be released as soon as there is no need for the manipulator to move.
- The programmer must always bring the FlexPendant with him/her when entering the manipulator's working space. This is to prevent anyone else taking control of the manipulator without the programmer’s knowledge.

Enabling device

The enabling device is a manually operated, constant pressure push-button which, when continuously activated in one position only, allows potentially hazardous functions but does not initiate them. In any other position, hazardous functions are stopped safely.

The enabling device is of a specific type where you must press the push-button only half-way to activate it. In the fully in and fully out positions, manipulator operation is impossible.

Hold-to-run function

The hold-to-run function allows movement when a button connected to the function is actuated manually and immediately stops any movement when released. The hold-to-run function can only be used in manual mode.

How to operate the hold-to-run function is described in *Operating manual - IRC5 with FlexPendant*.

© Copyright 2009-2010 ABB. All rights reserved.

1.2.3.7. Work inside the manipulator's working range

WARNING!

If work must be carried out within the manipulator’s work envelope, the following points must be observed:

- The operating mode selector on the controller must be in the manual mode position to render the enabling device operational and to block operation from a computer link or remote control panel.
- The manipulator’s speed is limited to max. 250 mm/s when the operating mode selector is in the position *Manual mode with reduced speed*. This should be the normal position when entering the working space. The position *Manual mode with full speed (100%)* may only be used by trained personnel who are aware of the risks that this entails.
- Pay attention to the rotating axes of the manipulator! Keep a distance to the axes in order not to get entangled with hair or clothing. Also be aware of any danger that may be caused by rotating tools or other devices mounted on the manipulator or inside the cell.
- Test the motor brake on each axis, according to the section *Brake testing on page 27*.

WARNING!

NEVER, under any circumstances, stay beneath any of the manipulator’s axes! There is always a risk that the manipulator will move unexpectedly when manipulator axes are moved using the enabling device or during other work inside the manipulator’s working range.

© Copyright 2009-2010 ABB. All rights reserved.

1.2.4. Safety stops

1.2.4.1. What is an emergency stop?

Definition of emergency stop

An emergency stop is a state that overrides any other manipulator control, disconnects drive power from the manipulator motors, stops all moving parts and disconnects power from any potentially dangerous functions controlled by the manipulator system.

An emergency stop state means that all power is disconnected from the manipulator except for the manual brake release circuits. You must perform a recovery procedure, i.e, resetting the emergency stop button and pressing the Motors On button, in order to return to normal operation.

The manipulator system can be configured so that the emergency stop results in either:

- An uncontrolled stop, immediately stopping the manipulator actions by disconnecting power from the motors.
- A controlled stop, stopping the manipulator actions with power available to the motors so that the manipulator path can be maintained. When completed, power is disconnected.

The default setting is uncontrolled stop. However, controlled stops are preferred since they minimize extra, unnecessary wear on the manipulator and the actions needed to return the manipulator system back to production. Please consult your plant or cell documentation to see how your manipulator system is configured.

NOTE!

The emergency stop function may only be used for the purpose and under the conditions for which it is intended.

NOTE!

The emergency stop function is intended for immediately stopping equipment in the event of an emergency.

NOTE!

Emergency stop should not be used for normal program stops as this causes extra, unnecessary wear on the manipulator. For how to perform normal program stops, see the section *Stopping programs* in*Operating manual - IRC5 with FlexPendant*.

Classification of stops

The safety standards that regulate automation and manipulator equipment define categories in which each type of stop applies:

If the stop is...	... then it is classified as...
uncontrolled	category 0 (zero)
controlled	category 1

© Copyright 2009-2010 ABB. All rights reserved.

Continues on next page

1.2.4.1. What is an emergency stop?

Continued

Emergency stop devices

In a manipulator system there are several emergency stop devices that can be operated in order to achieve an emergency stop. There are emergency stop buttons available on the FlexPendant and on the controller cabinet (on the Control Module on a Dual Cabinet Controller). There can also be other types of emergency stops on your manipulator. Consult your plant or cell documentation to see how your manipulator system is configured.

© Copyright 2009-2010 ABB. All rights reserved.

1.3 Safety related instructions

1.3.1. Safety signals in the manual

Introduction to safety signals

This section specifies all dangers that can arise when doing the work described in this manual. Each danger consists of:

- A caption specifying the danger level (DANGER, WARNING, or CAUTION) and the type of danger.
- A brief description of what will happen if the operator/service personnel **do not** eliminate the danger.
- An instruction on how to eliminate the danger to simplify doing the work.

Danger levels

The table below defines the captions specifying the danger levels used throughout this manual.

Symbol	Designation	Significance
danger	DANGER	Warns that an accident *will* occur if the instructions are not followed, resulting in a serious or fatal injury and/or severe damage to the product. It applies to warnings that apply to danger with, for example, contact with high voltage electrical units, explosion or fire risk, risk of poisonous gases, risk of crushing, impact, fall from height, etc.
warning	WARNING	Warns that an accident *may* occur if the instructions are not followed that can lead to serious injury, possibly fatal, and/or great damage to the product. It applies to warnings that apply to danger with, for example, contact with high voltage electrical units, explosion or fire risk, risk of poisonous gases, risk of crushing, impact, fall from height, etc.
Electrical shock	ELECTRICAL SHOCK	Warns for electrical hazards which could result in severe personal injury or death.
caution	CAUTION	Warns that an accident may occur if the instructions are not followed that can result in injury and/or damage to the product. It also applies to warnings of risks that include burns, eye injury, skin injury, hearing damage, crushing or slipping, tripping, impact, fall from height, etc. Furthermore, it applies to warnings that include function requirements when fitting and removing equipment where there is a risk of damaging the product or causing a breakdown.

© Copyright 2009-2010 ABB. All rights reserved.

Continues on next page

1.3.1. Safety signals in the manual

Continued

Symbol	Designation	Significance
Electrostatic discharge (ESD)	ELECTROSTATIC DISCHARGE (ESD)	Warns for electrostatic hazards which could result in severe damage to the product.
Note	NOTE	Describes important facts and conditions.
Tip	TIP	Describes where to find additional information or how to do an operation in an easier way.

© Copyright 2009-2010 ABB. All rights reserved.

1.3.2. Safety symbols on the manipulator labels

Introduction to labels

This section describes safety symbols used on labels (stickers) on the manipulator.

Symbol are used in combinations on the labels, describing each specific warning. The descriptions in this section are generic, the labels can contain additional information such as values.

Types of labels

Both the manipulator and the controller are marked with several safety and information labels, containing important information about the product. The information is useful for all personnel handling the manipulator system, for example during installation, service, or operation.

The safety labels are language independent, they only use graphics. See *Symbols on safety labels on page 35*.

The information labels can contain information in text (English, German, and French).

Symbols on safety labels

Symbol	Description
xx0900000812	**Warning!** Warns that an accident *may* occur if the instructions are not followed that can lead to serious injury, possibly fatal, and/or great damage to the product. It applies to warnings that apply to danger with, for example, contact with high voltage electrical units, explosion or fire risk, risk of poisonous gases, risk of crushing, impact, fall from height, etc.
xx0900000811	**Caution!** Warns that an accident may occur if the instructions are not followed that can result in injury and/or damage to the product. It also applies to warnings of risks that include burns, eye injury, skin injury, hearing damage, crushing or slipping, tripping, impact, fall from height, etc. Furthermore, it applies to warnings that include function requirements when fitting and removing equipment where there is a risk of damaging the product or causing a breakdown.
xx0900000839	**Prohibition** Used in combinations with other symbols.

© Copyright 2009-2010 ABB. All rights reserved.

Continues on next page

1.3.2. Safety symbols on the manipulator labels

Continued

Symbol	Description
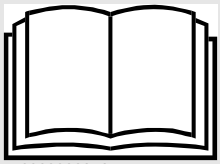 xx0900000813	**Product manual** Read the product manual for details.
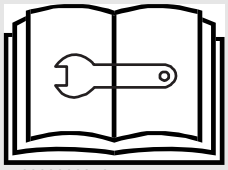 xx0900000816	**Before dismantling see product manual**
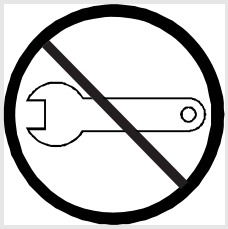 xx0900000815	**Do not dismantle** Dismantling this part can cause injury.
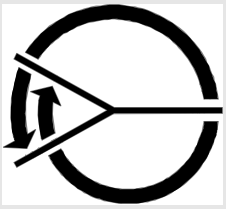 xx0900000814	**Extended rotation** This axis has extended rotation (working area) compared to standard.
xx0900000808	**Brake release** Pressing this button will release the brakes. This means that the manipulator arm can fall down.
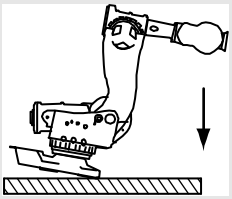 xx0900000810	**Tip risk when loosening bolts** The manipulator can tip over if the bolts are not securely fastened.
xx0900000817	**Crush** Risk for crush injuries.

Continues on next page

© Copyright 2009-2010 ABB. All rights reserved.

Continued

Symbol	Description
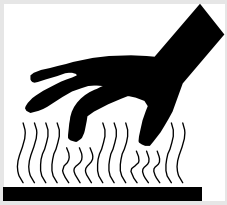 xx0900000818	**Heat** Risk of heat that can cause burns.
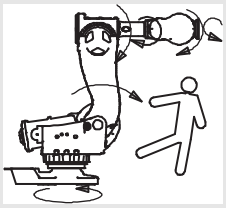 xx0900000819	**Moving robot** The robot can move unexpectedly.
xx0900000820	**Brake release buttons**
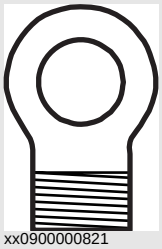 xx0900000821	**Lifting bolt**
xx0900000822	**Lifting of robot**
xx0900000823	**Oil** Can be used in combination with prohibition if oil is not allowed.

© Copyright 2009-2010 ABB. All rights reserved.

Continues on next page

1.3.2. Safety symbols on the manipulator labels

Continued

Symbol	Description
xx0900000824	**Mechanical stop**
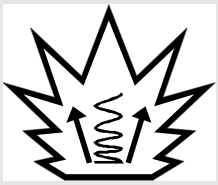 xx0900000825	**Stored energy** Warns that this part contains stored energy. Used in combination with *Do not dismantle* symbol.
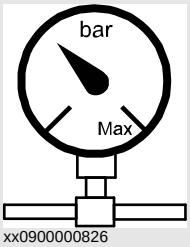 xx0900000826	**Pressure** Warns that this part is pressurized. Usually contains additional text with the pressure level.
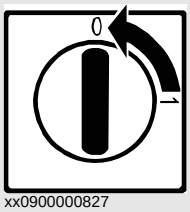 xx0900000827	**Shut off with handle** Use the power switch on the controller.

© Copyright 2009-2010 ABB. All rights reserved.

1.3.3. DANGER - Moving manipulators are potentially lethal!

Description

Any moving manipulator is a potentially lethal machine.

When running, the manipulator may perform unexpected and sometimes irrational movements. Moreover, all movements are performed with great force and may seriously injure any personnel and/or damage any piece of equipment located within the working range of the manipulator.

Elimination

	Action	Note
1.	Before attempting to run the manipulator, make sure all *emergency stop equipment* is correctly installed and connected.	Emergency stop equipment such as gates, tread mats, light curtains, etc.
2.	Usually the hold-to-run function is active only in manual full speed mode. To increase safety it is also possible to activate hold-to-run for manual reduced speed with a system parameter. The hold-to-run function is used in manual mode, not in automatic mode.	How to use the hold-to-run function is described in section *How to use the hold-to-run function* in the *Operating manual - IRC5 with FlexPendant*.
3.	Make sure no personnel are present within the working range of the manipullator before pressing the start button.	

© Copyright 2009-2010 ABB. All rights reserved.

1.3.4. DANGER - First test run may cause injury or damage!

Description

Since performing a service activity often requires disassembly of the robot there are several safety risks to take into consideration before the first test run.

Elimination

Follow the procedure below when performing the first test run after a service activity, such as repair, installation, or maintenance.

	Action
1.	Remove all service tools and foreign objects from the robot and its working area!
2.	Install all safety equipment properly!
3.	Make sure all personnel are standing at a safe distance from the robot, that is out of its reach behind safety fences, etc!
4.	Pay special attention to the function of the part previously serviced!

Collision risks

CAUTION!

When programming the movements of the manipulator always check potential collision risks before the first test run!

© Copyright 2009-2010 ABB. All rights reserved.

1.3.5. WARNING - The unit is sensitive to ESD!

Description

ESD (electrostatic discharge) is the transfer of electrical static charge between two bodies at different potentials, either through direct contact or through an induced electrical field. When handling parts or their containers, personnel not grounded may potentially transfer high static charges. This discharge may destroy sensitive electronics.

Elimination

	Action	Note
1.	Use a wrist strap	Wrist straps must be tested frequently to ensure that they are not damaged and are operating correctly.
2.	Use an ESD protective floor mat.	The mat must be grounded through a current-limiting resistor.
3.	Use a dissipative table mat.	The mat should provide a controlled discharge of static voltages and must be grounded.

Location of wrist strap button

The location of the wrist strap button is shown in the following illustration.

IRC5

The wrist strap button is located in the top right corner.

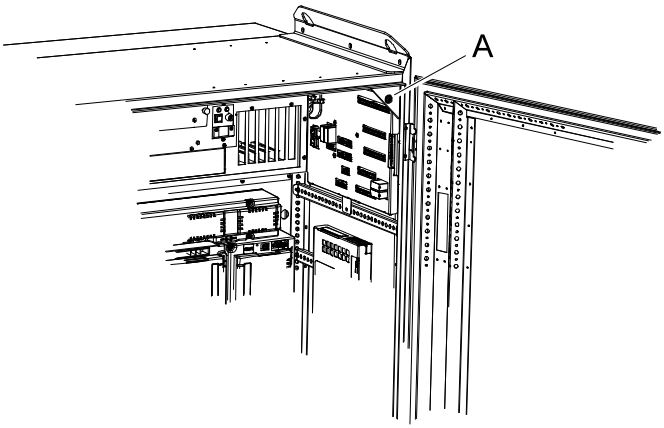

xx0500002171

A	Wrist strap button

© Copyright 2009-2010 ABB. All rights reserved.

Continues on next page

1.3.5. WARNING - The unit is sensitive to ESD!

Continued

IRC5 Compact Controller

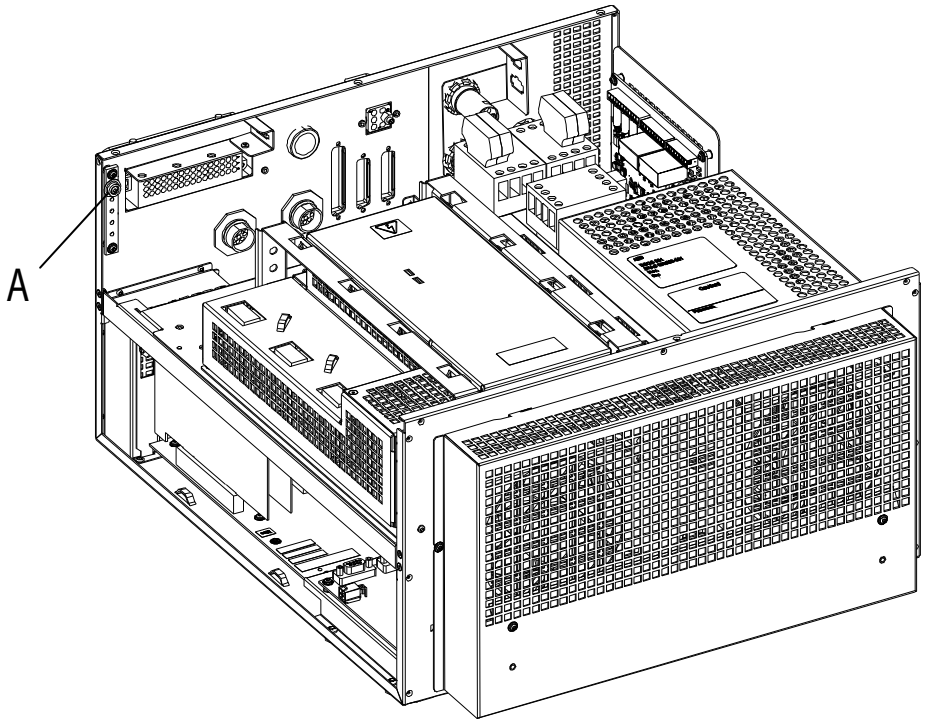

xx0900000315

A	Wrist strap button

© Copyright 2009-2010 ABB. All rights reserved.

1.3.6. WARNING - Safety risks during work with gearbox lubricants (oil or grease)

Description

When handling the gearbox lubricants, there is a risk of both personal injury and product damage occurring! The following safety information must be regarded before performing any work with lubricants in the gearboxes!

Warnings and elimination

Warning	Description	Elimination/Action
Hot oil or grease!	Changing and draining gearbox oil or grease may require handling hot lubricant heated up to 90 °C!	Make sure that protective gear like goggles and gloves are always worn during this activity.
Allergic reaction	When working with gearbox lubricant there is a risk of an allergic reaction!	Make sure that protective gear like goggles and gloves are always worn.
Possible pressure build-up in gearbox!	When opening the oil or grease plug, there may be pressure present in the gearbox, causing lubricant to spray from the opening!	Open the plug carefully and keep away from the opening. Do not overfill the gearbox when filling.
Do not overfill!	Overfilling of gearbox lubricant can lead to internal over-pressure inside the gearbox which in turn may: • damage seals and gaskets • completely press out seals and gaskets • prevent the robot from moving freely.	Make sure not to overfill the gearbox when filling it with oil or grease! After filling, check the correct level.
Specified amount depends on drained volume!	The specified amount of oil or grease is based on the total volume of the gearbox. When changing the lubricant, the amount refilled may differ from the specified amount, depending on how much has previously been drained from the gearbox.	After refilling, check the lubricant level.

© Copyright 2009-2010 ABB. All rights reserved.

1.3.6. WARNING - Safety risks during work with gearbox lubricants (oil or grease)

© Copyright 2009-2010 ABB. All rights reserved.

2 Installation and commissioning

2.1. Introduction

General

This chapter contains information for installing the robot at the working site.

More detailed technical data can be found in the *Product specification* for the robot, such as:

- load diagram
- permitted extra loads (equipment)
- location of extra loads (equipment).

Safety information

Before any installation work is commenced, it is extremely important that all safety information is observed!

There are general safety aspects that must be read through, as well as more specific safety information that describes the danger and safety risks when performing the procedures. Read the chapter *Safety on page 15* before performing any installation work.

NOTE!

If the robot is connected to power, always make sure that the robot is connected to *earth* before starting any installation work!

For more information see:

- Product manual - IRC5
- Product manual - IRC5 Compact
- Product manual - Panel Mounted Controller

© Copyright 2009-2010 ABB. All rights reserved.

2.2 Unpacking

2.2.1. Pre-installation procedure

Introduction

This section is intended for use when unpacking and installing the robot for the first time. It also contains information useful during later re-installation of the robot.

Checking the pre-requisites for installation

Installation craftsmen working with an ABB robot must:

- be trained by ABB and have the required knowledge of mechanical and electrical installation/maintenance/repair work
- conform to all national and local codes.

	Action
1.	Visually inspect the robot to make sure that it is not damaged.
2.	Make sure that the lifting device used is suitable to handle the weight of the robot as specified in: • *Weight, robot on page 46*
3.	If the robot is not installed directly, it must be stored as described in: • *Storage conditions, robot on page 47*
4.	Make sure that the expected operating environment of the robot conforms to the specifications as described in: • *Operating conditions, robot on page 47*
5.	Before taking the robot to its installation site, make sure that the site conforms to: • *Loads on foundation, robot on page 47* • *Requirements, foundation on page 47* • *Protection classes, robot on page 48*
6.	Before moving the robot, please observe the stability of the robot: • *Risk of tipping/Stability on page 51*
7.	When these prerequisites are met, the robot can be taken to its installation site as described in section: • *Lifting the robot with roundslings on page 52*

Weight, robot

The table shows the weight of the robot.

Variant	Weight
IRB 120-3/0.6	25 kg

© Copyright 2009-2010 ABB. All rights reserved.

Continues on next page

Loads on foundation, robot

Force	Mounting position	Endurance load (in operation)	Max. load at (emergency stop)
Force Fxy	Floor & Suspended Wall	±265 ±470	±515 ±735
Force Fz	Floor Suspended Wall	-265 ±200 265 ±200 0 ±200	-265 ±365 265 ±365 0 ±630
Torque Mxy	Floor & Suspended Wall	±195 ±240	±400 ±450
Torque Mz	Floor & Suspended Wall	±85 ±90	±155 ±175

Requirements, foundation

The table shows the requirements for the foundation where the weight of the installed robot is included:

Requirements	Value	Note
Min. levelity	0.1/500 mm	
Max. tilt	5°	
Min. resonance frequency	22 Hz	

Storage conditions, robot

The table shows the allowed storage conditions for the robot:

Parameter	Value
Min. ambient temperature	-25°C
Max. ambient temperature	+55°C
Max. ambient temperature (less than 24 hrs)	+70°C
Max. ambient humidity	Max 95% at constant temperature

Operating conditions, robot

The table shows the allowed operating conditions for the robot:

Parameter	Value
Max. ambient temperature	+45°C
Min. ambient temperature	+5°C
Max. ambient humidity	Max 95% at constant temperature

© Copyright 2009-2010 ABB. All rights reserved.

Continues on next page

Continued

Protection classes, robot

The table shows the protection class of the robot:

Robot version	Protection class [1)]
Standard	IP 30

[1)] IP 30 - the first index indicates:

- Protection against human/tool contact. "3" = a tool bigger than or equal to 2,5 mm in diameter.
- Protection against solid objects (foreign bodies). "3" = a round body bigger than or equal to 2,5 mm in diameter must not enter at all.

IP 30 - the second index indicates protection against water:

- "0" = no special protection.

© Copyright 2009-2010 ABB. All rights reserved.

2.2.2. Working range and type of motion

Working range

The figures show the working ranges of the robot.

The extreme positions of the robot arm are specified at the wrist center (dimensions in mm).

Working range

The illustration shows the unrestricted working range of the robot.

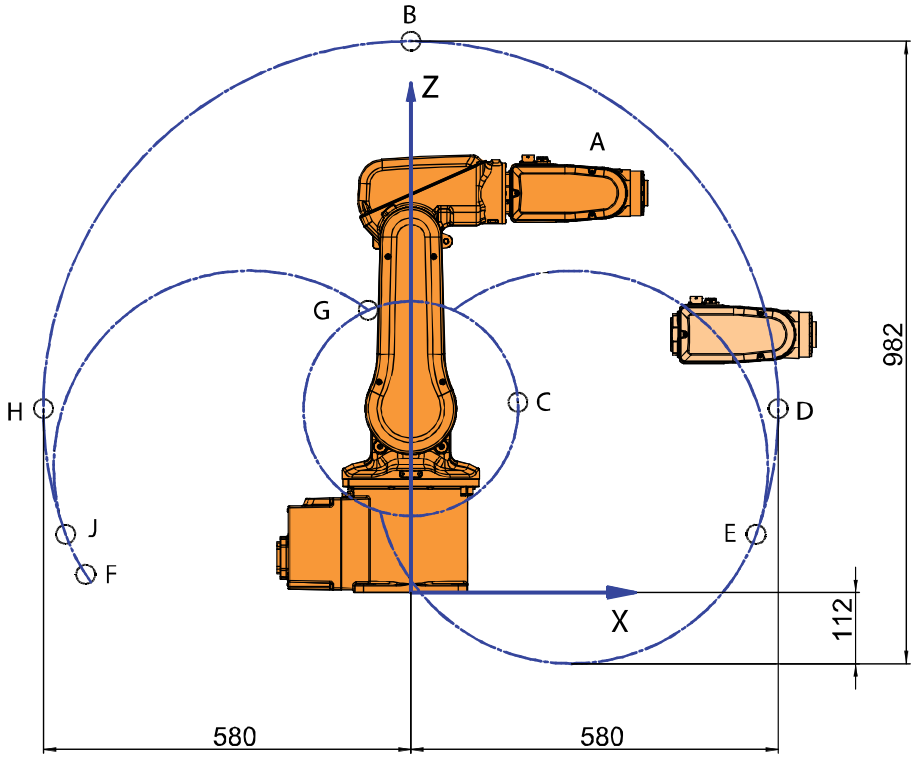

xx0900000201

Pos	Position at wrist center (mm)		Angle (degrees)	
	X	Z	Axis 2	Axis 3
A	302 mm	630 mm	0°	0°
B	0 mm	870 mm	0°	-76.9°
C	169 mm	300 mm	0°	+70.0°
D	580 mm	270 mm	+90°	-76.9°
E	545 mm	91 mm	+110°	-76.9°
F	-513 mm	28 mm	-110°	-90.0°
G	-67 mm	445 mm	-110°	+70.0°
H	-580 mm	270 mm	-90°	-76.9°
J	-545 mm	91 mm	-110°	-76.9°

Continues on next page

© Copyright 2009-2010 ABB. All rights reserved.

Continued

Turning radius

The turning radius of robot is shown in the figure.

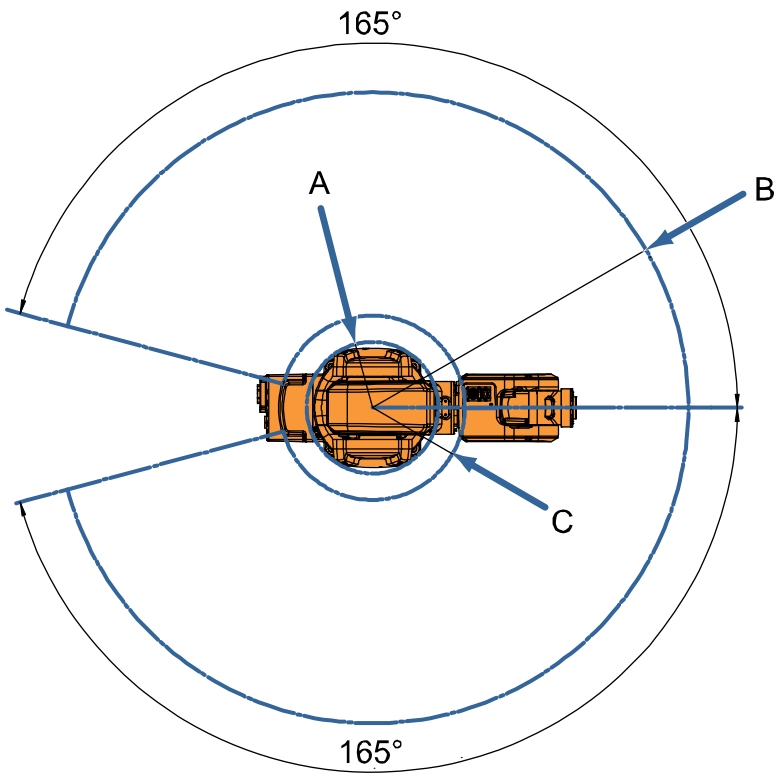

xx0900000157

Robot variant	Pos. A	Pos. B	Pos. C
IRB 120-3/0.6	R121 [1)]	R580	R169.4

[1)] Minimum turning radius axis 1.

Robot motion

The table specifies the types and ranges of motion in every axes.

Location of motion	Type of motion	Range of movement
Axis 1	Rotation motion	+165° to -165°
Axis 2	Arm motion	+110° to -110°
Axis 3	Arm motion	+70° to -90°
Axis 4	Wrist motion	+160° to -160°
Axis 5	Bend motion	+120° to -120°
Axis 6	Turn motion	+400° to -400°

© Copyright 2009-2010 ABB. All rights reserved.

2.2.3. Risk of tipping/Stability

Risk of tipping

When the robot is not fastened to the foundation , the robot is not stable in the whole working area. Moving the arms will displace the center of gravity, which may cause the robot to tip over.

Most stable position

This procedure describes how to make sure the robot does not tip during installation while not safely secured to the foundation.

CAUTION!

When the robot is not fastened to the floor, it will not be stable in any part of its working area.

1. DO NOT change the robot position before securing it to its foundation. The shipping position is the most stable.
2. If the robot, for some reason, must be moved from its original position, ensure that the center of gravity not is displaced.

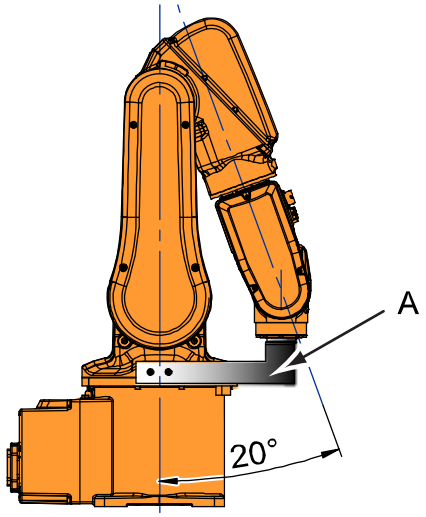

xx0900000580

© Copyright 2009-2010 ABB. All rights reserved.

2.3 On-site installation

2.3.1. Lifting the robot with roundslings

Introduction

This procedure details how to lift the robot using roundslings.

Required equipment

Equipment	Note
Overhead crane	-
Roundslings	(Circle) Length: 3 m Lifting capacity: 100 kg
Lifting tool, set	The set includes: • bracket • attachment screws • washers. For art. no. and details see chapter *Reference information* section: • *Special tools on page 192*

© Copyright 2009-2010 ABB. All rights reserved.

Continues on next page

Lifting

Attach the roundslings as shown in the figure.

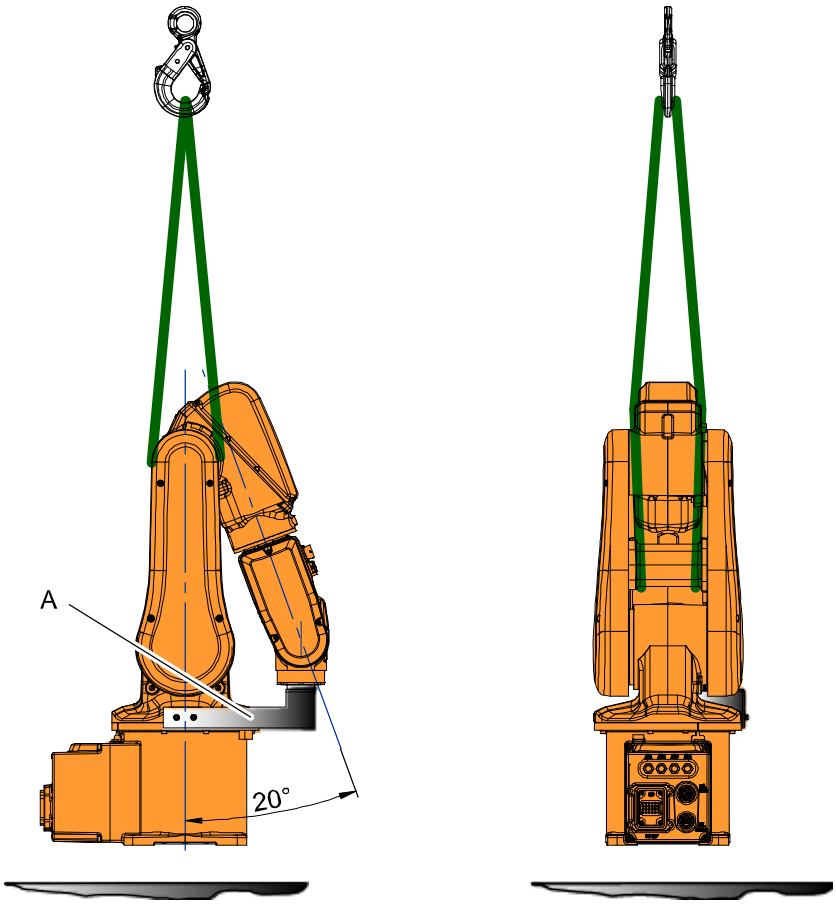

xx0900000496

A	Bracket

Lifting instructions

Use this procedure to lift the robot in a safe way.

	Action	Note
1.	**CAUTION!** The robot weighs 25 kg. All lifting equipment must be sized accordingly!	
2.	**CAUTION!** Attempting to lift the robot in any other position than that recommended may result in the robot tipping over and causing severe damage or injury!	

Continues on next page

© Copyright 2009-2010 ABB. All rights reserved.

2.3.1. Lifting the robot with roundslings

Continued

	Action	Note
3.	**WARNING!** Personnel must not, under any circumstances, be present under the suspended load!	
4.	Move the robot to its most stable position.	Detailed in section: • *Risk of tipping/Stability on page 51*
5.	**DANGER!** Turn off all electric power, hydraulic and pneumatic pressure supplies to the robot!	
6.	Fit the *bracket* with its attachment screws and washers, in order to secure the upper arm to the base.	See *Required equipment on page 52*. 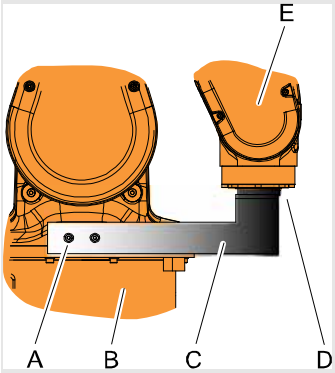 xx0900000636 Parts: • A: Attachment screws M4x8 quality steel 8.8 ELZN (2 pcs) • B: Base • C: Bracket • D: Attachment screws M5x12 quality 8.8-A2F (2 pcs) • E: Upper arm
7.	Attach the *roundsling*.	See the figure in: • *Lifting on page 53*
8.	Lift the robot with an overhead crane.	

© Copyright 2009-2010 ABB. All rights reserved.

2.3.2. Manually releasing the brakes

Introduction to manually releasing the brakes

This section describes how to release the holding brakes of each axis´ motor.

This can be done in three ways:

- using the brake release unit (placed on the front of the IRC5 Compact controller cabinet) when the robot is connected to the controller
- using the brake release unit when the robot is disconnected from the controller, but connected to an external power supply at the connector R1.MP
- using an external voltage supply directly on the motor connector.

Brake release button at the front of IRC5 Compact controller

There is no brake release button placed on the robot. It is placed at the front of the IRC5 Compact controller cabinet, beneath the cover over the brake release button. See figure:

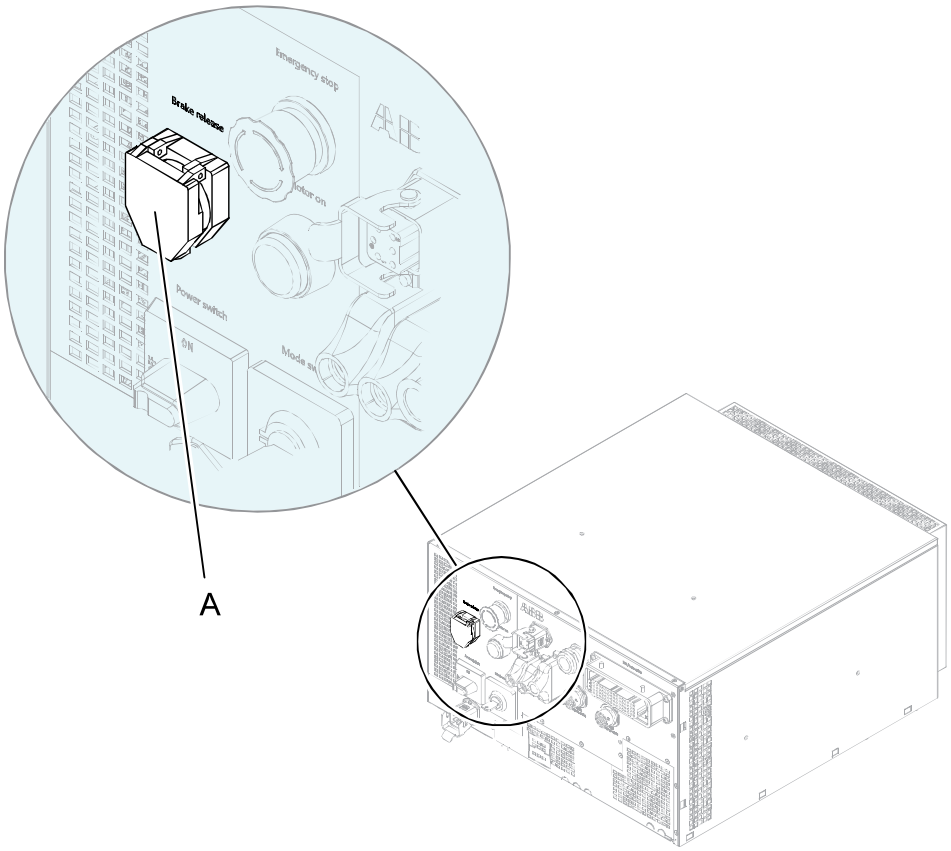

xx0900000559

A	Brake release button (beneath the cover)

© Copyright 2009-2010 ABB. All rights reserved.

Continues on next page

Using the brake release unit when the robot is connected to the controller

Use this procedure to release the holding brakes using the internal brake release unit in the controller cabinet.

	Action	Note
1.	The *brake release button* is located on the front of the IRC5 Compact controller cabinet. **NOTE!** The single brake release button, is used to release the brakes on all axes.	See the figure in: • *Brake release button at the front of IRC5 Compact controller on page 55*
2.	**DANGER!** When releasing the holding brakes, the robot axes may move very quickly and sometimes in unexpected ways! Make sure no personnel is near the robot when brakes are released!	
3.	Release the holding brakes by pushing the brake release button. The brake will function again as soon as the button is released.	**NOTE!** The controller must be powered on!

© Copyright 2009-2010 ABB. All rights reserved.

Continues on next page

Using the brake release unit with an external power supply

Use this procedure to release the holding brakes, when the robot is not connected to the controller.

	Action	Note
1.	**NOTE!** Be careful not to interchange the 24V and 0V pins. If they are mixed up, damage can be caused to the brake release unit and to the system board.	
2.	Connect an external 24VDC power supply to connector R1.MP on the robot base.	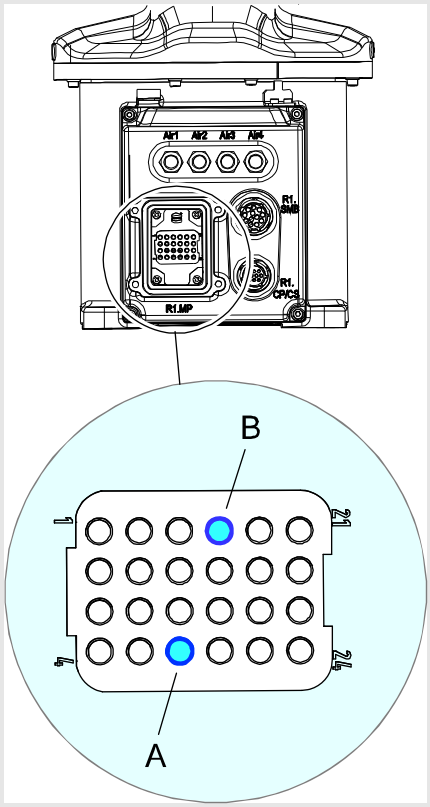 xx0900000638 Connect to connector R1.MP: • A: 0V to pin 12 • B: 24V to pin 13
3.	**CAUTION!** The holding brakes are released to all axes when power is connected to the pins.	

© Copyright 2009-2010 ABB. All rights reserved.

2.3.3. Orienting and securing the robot

Introduction

This section details how to orient and secure the robot to the foundation or base plate in order to run the robot safely. The requirements made on the foundation are shown in sections:

- *Loads on foundation, robot on page 47*
- *Requirements, foundation on page 47*.

Hole configuration, base

The illustration shows the hole configuration used when securing the robot.

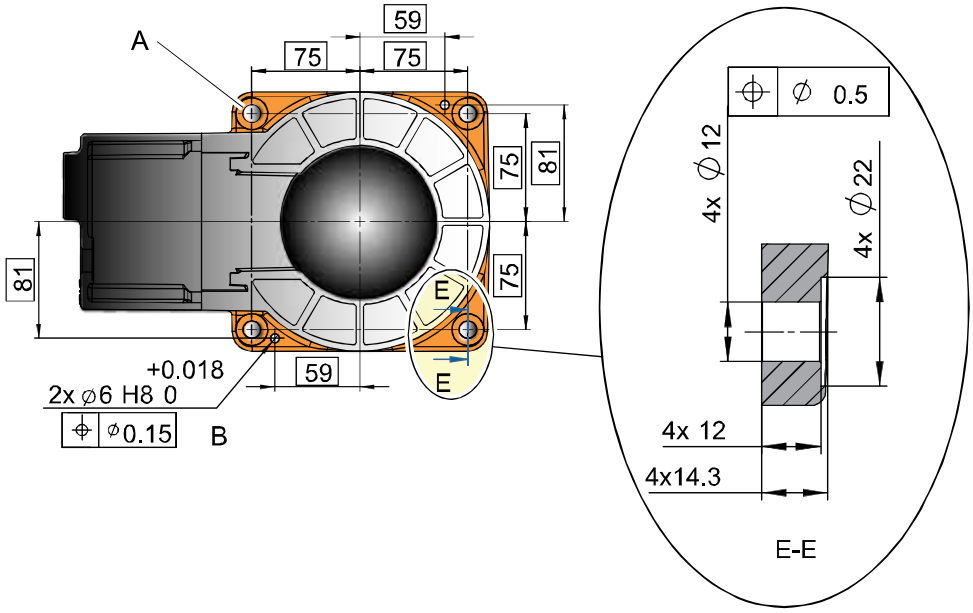

xx0900000162

A	Holes for attachment screws (4 pcs)
B	Holes for pins (2 pcs)

© Copyright 2009-2010 ABB. All rights reserved.

Continues on next page

Specification, attachment screws and pins

The table specifies the type of securing screws and washers to be used to secure the robot to the foundation or base plate. It also specifies the type of pins to be used.

Securing parts/Facts	Dimension	Note
Securing screws	M10x25 Quality 8.8-A3F	4 pcs
Washers	10	4 pcs
Tightening torque	35 Nm	
Pins	D6x20 ISO 2338-6 m6x30 - A1	2 pcs
Level surface requirements	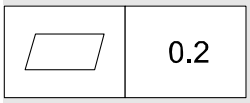 xx0900000643	

Orienting and securing the robot

Use this procedure to orient and secure the robot.

	Action	Info
1.	Make sure the installation site for the robot conforms to the specifications in section: • *Pre-installation procedure on page 46*.	
2.	Prepare the installation site with attachment holes.	The hole configuration of the base is shown in the figure in: • *Hole configuration, base on page 58*
3.	**CAUTION!** The robot weighs 25 kg. All lifting equipment must be sized accordingly!	
4.	**CAUTION!** When the robot is put down after being lifted or transported, there is a risk of it tipping, if not properly secured.	
5.	Lift the robot to its installation site.	How to lift the robot is described in section: • *Lifting the robot with roundslings on page 52*
6.	Fit two *pins* to the holes in the base.	
7.	Guide the robot gently, using the attachment screws while lowering it into its mounting position.	Make sure the robot base is correctly fitted onto the pins.
8.	Fit the *securing screws* and *washers* in the attachment holes of the base.	

Continues on next page

© Copyright 2009-2010 ABB. All rights reserved.

Continued

	Action	Info
9.	Tighten the bolts in a criss-cross pattern to ensure that the base is not distorted.	

Securing robot on a mounting plate

When bolting a mounting plate or frame to a concrete floor, follow the general instructions for expansion-shell bolts.

Screw joints must be able to withstand the stress loads defined in section *Loads on foundation, robot on page 47*.

© Copyright 2009-2010 ABB. All rights reserved.

2.3.4. Fitting equipment on robot

Introduction

The robot features mounting holes for additional equipment.

Access to any of these mounting holes may be obstructed by any additional cabling, equipment etc. fitted by the robot user. Make sure the required mounting holes are accessible when planning the robot cell.

NOTE!

Never drill a hole in the robot without first consulting ABB!

Maximum loads

The table shows the maximum permitted loads for any extra equipment fitted in the holes intended for this purpose. See figure in *Fitting equipment on base and upper arm on page 62*.

Robot	Max load A (base, on each side)	Max load B (upper arm)
IRB 120	0.5 kg	0.3 kg

© Copyright 2009-2010 ABB. All rights reserved.

Continues on next page

Continued

Fitting equipment on base and upper arm

The illustration shows the fitting holes available for fitting extra equipment on the base and upper arm of the robot.

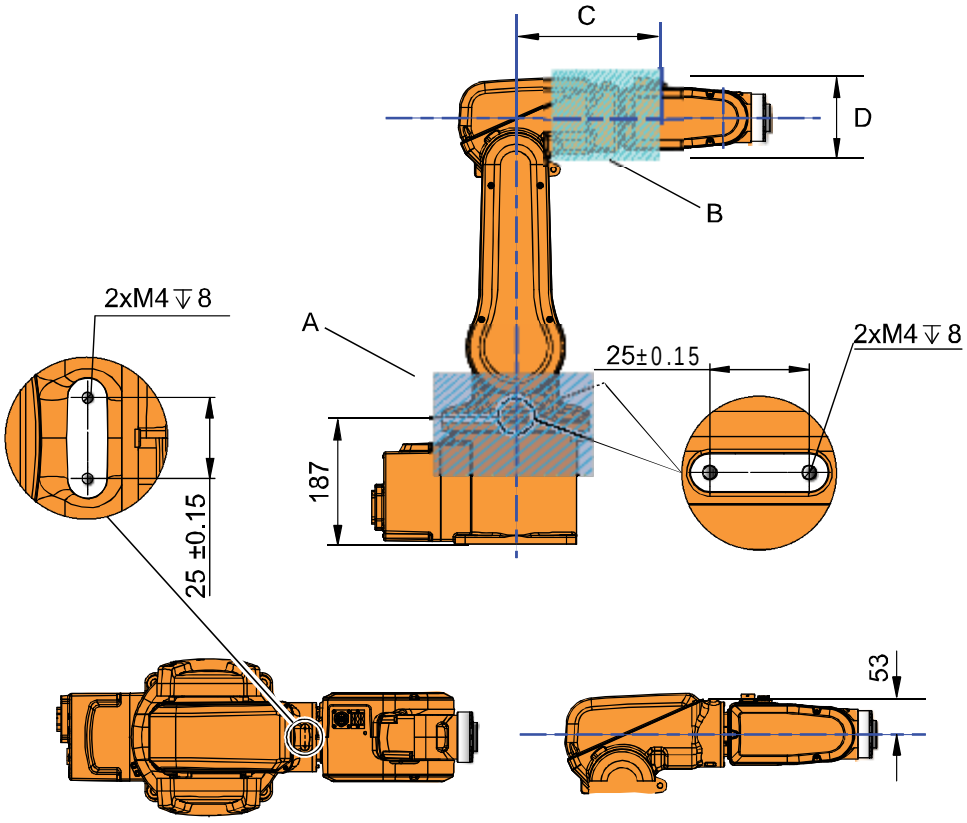

xx0900000203

A	Load area base, max load 0.5 kg (on each side)
B	Load area upper arm, max load 0.3 kg
C	Max. 172 mm
D	Max. radius 75 mm

NOTE! Fitting holes at the base of the robot are placed on each side.

© Copyright 2009-2010 ABB. All rights reserved.

Continues on next page

Fitting equipment on mounting flange

The illustration shows the mechanical interface for the mounting flange.

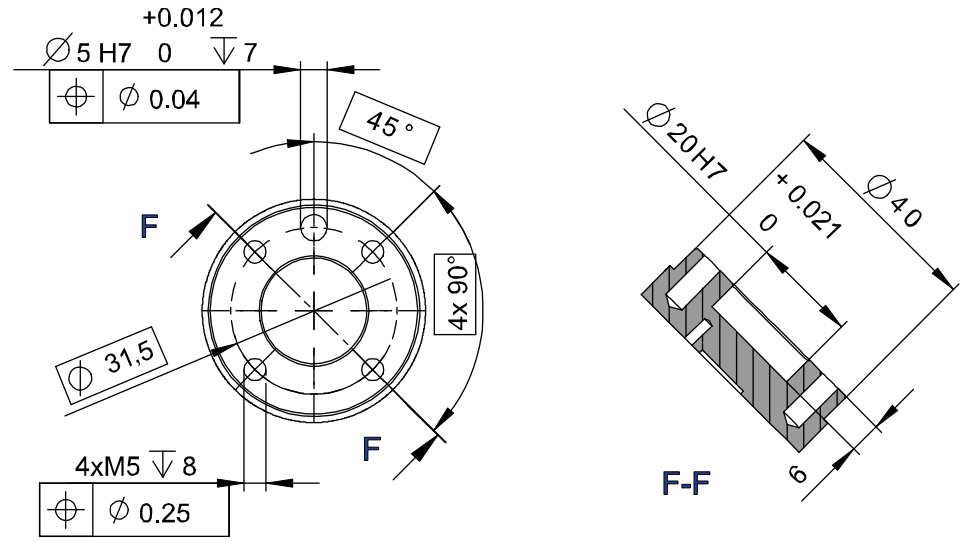

xx0900000204

© Copyright 2009-2010 ABB. All rights reserved.

2.3.5. Suspended mounting

General

Initially the system is configured for mounting on the floor, without leaning. The method for mounting the robot in a suspended position is basically the same as for floor mounting.

NOTE!

With suspended installation, make sure that the gantry or corresponding structure is rigid enough to prevent unacceptable vibrations and deflections, so that optimum performance can be achieved.

System parameters

If the robot is mounted at any other angle, the system parameter “gravity beta” must be updated. Gravity beta specifies the robot’s mounting angle expressed in radians.

NOTE!

It is very important to configure gravity beta correctly so that the robot system can control the movements in the best possible way. Incorrect definition of the mounting angle (gravity beta) will result in:

- Overloading the mechanical structure.
- Lower path performance and path accuracy.
- Some functions will not work properly, for example Load Identification & Collision detection.

Mounting angles and values

The parameter “gravity beta” specifies the robot’s mounting angle in radians. It is calculated in the following way.

Gravity beta = 45° x 3.141593/180 = 0.785398 radians.

Example of position	Mounting angle	Gravity beta
Floor (pos 1)	0°	0.000000 (Default)
Tilted (pos 2)	45°	0.785398
Wall (pos 3)	90°	1.570796
Suspended (pos 4)	180°	3.141593

© Copyright 2009-2010 ABB. All rights reserved.

Continues on next page

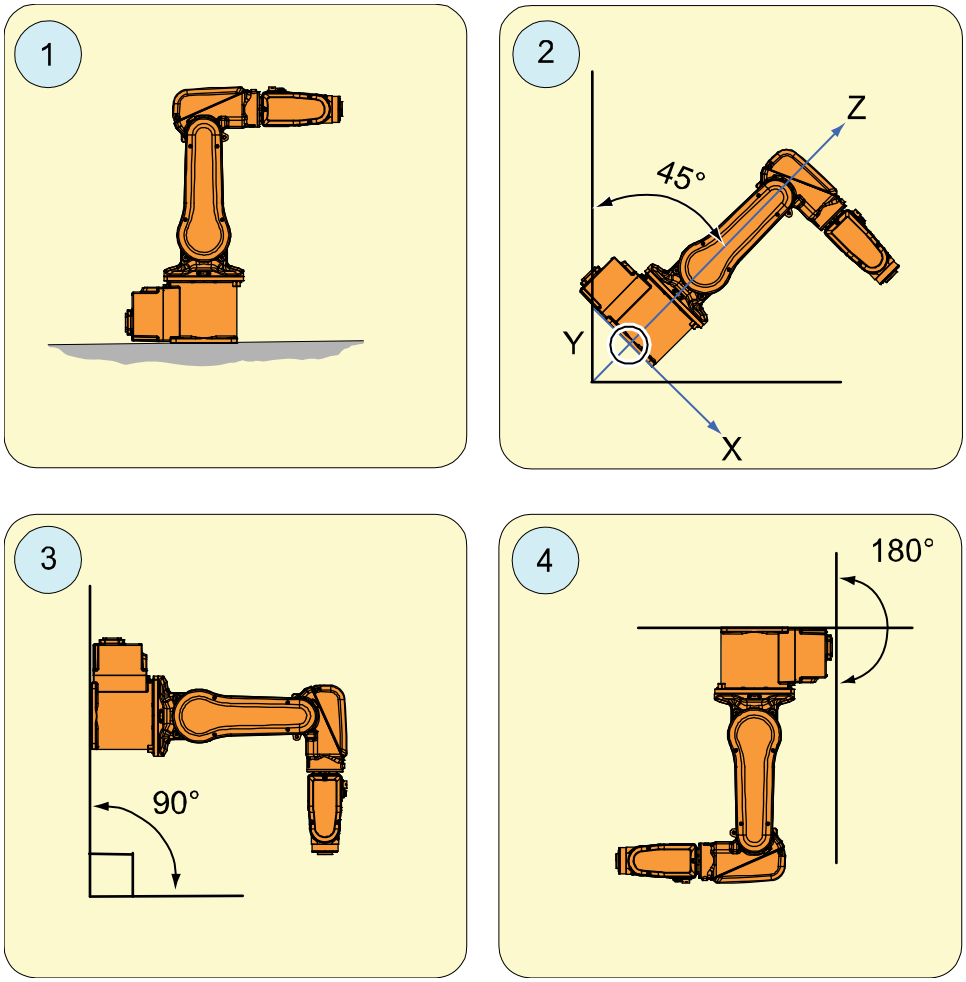

xx1000000126

Pos 1	Floor mounted
Pos 2	Mounting angle 45°
Pos 3	Mounting angle 90°
Pos 4	Mounting angle 180°

Defining the parameter in the software, RobotWare 5.0

The value of the system parameter *Gravity beta* must be redefined when changing the mounting angle of the robot. The parameter belongs to the type *Robot*, in the topic *Motion*. How to calculate a new value is detailed in *Mounting angles and values on page 64*.

The parameter is further detailed in the *Technical reference manual - System parameters*.

The parameter can be edited either with the FlexPendant or in RobotStudio. Read about how to change the parameter in the *Operating manual - IRC5 with FlexPendant* or in the *Operating manual - RobotStudio*. Article numbers for the manuals are specified in *References on page 8*.

© Copyright 2009-2010 ABB. All rights reserved.

2.3.6. Loads

General

Any loads mounted on the robot must be defined correctly and carefully (with regard to the position of center of gravity and mass moments of inertia) in order to avoid jolting movements and overloading motors, gears and structure.

CAUTION!

Incorrectly defined loads may result in operational stops or major damage to the robot.

References

Load diagrams, permitted extra loads (equipment) and their positions are specified in the *Product Specification*. The loads must also be defined in the software as detailed in *Operating manual IRC5 with FlexPendant*.

Stop time and braking distances

Robot motor brake performance depends on any loads attached. For further information about brake performance, please contact ABB.

© Copyright 2009-2010 ABB. All rights reserved.

2.4 Restricting the working range

2.4.1. Introduction

General

When installing the robot, make sure that it can move freely within its entire working space. If there is a risk that it may collide with other objects, its working space should be limited.

This section describes how to install hardware that restricts the working range.

Note! Adjustments must also be made in the robot configuration software (system parameters). References to relevant manuals are included in the installation procedures.

© Copyright 2009-2010 ABB. All rights reserved.

2.4.2. Mechanically restricting the working range

Location of mechanical stops

The figures shows where the mechanical stops are placed on the robot.

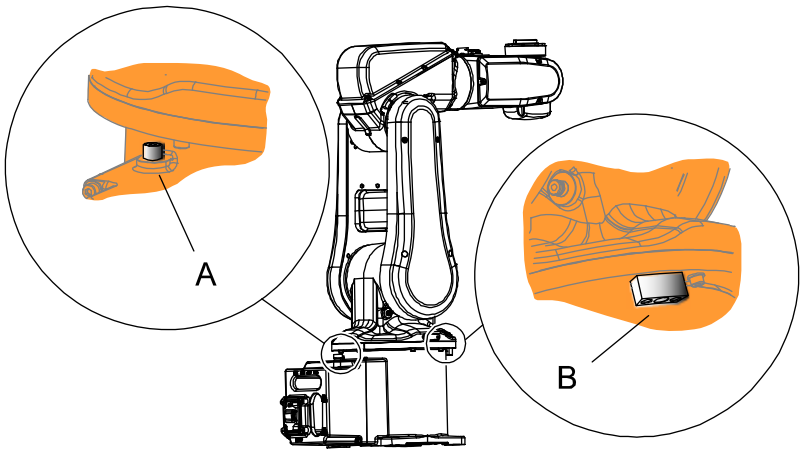

xx1000000002

A	Mechanical stop axis 1 (base)
B	Mechanical stop axis 1 (swing plate)

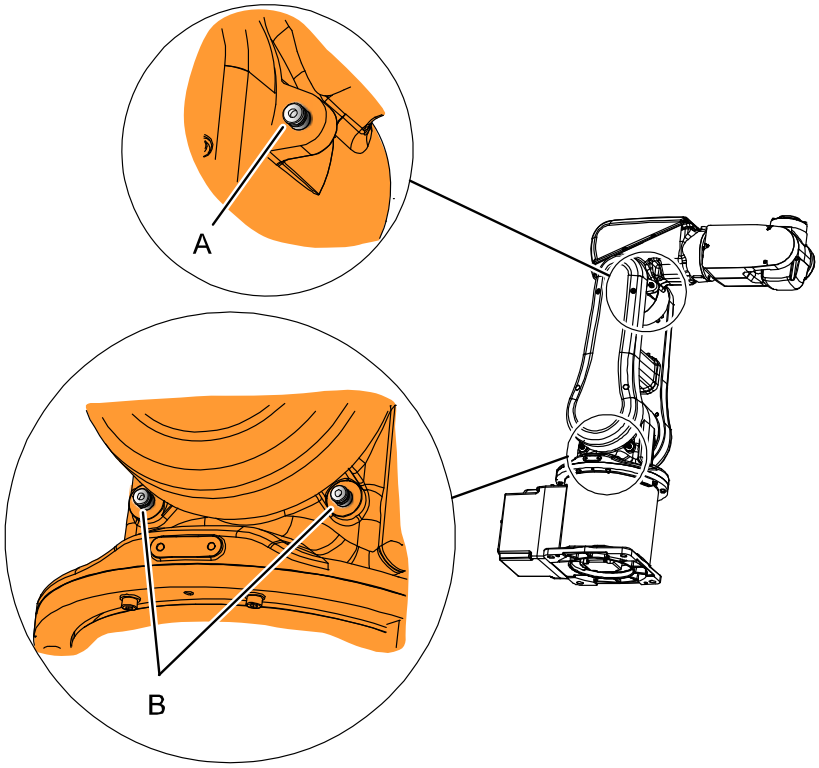

xx0900000583

A	Mechanical stop axis 3 (upper arm)
B	Mechanical stops axis 2 (swing housing)

© Copyright 2009-2010 ABB. All rights reserved.

Continues on next page

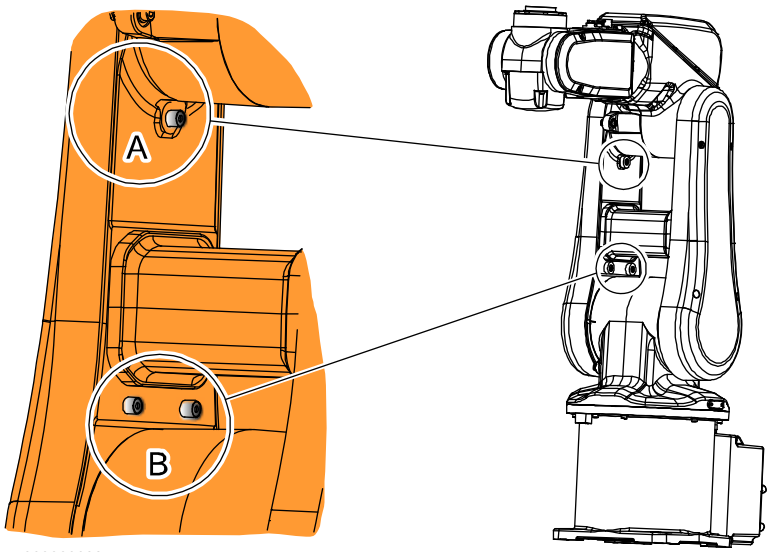

xx1000000003

A	Mechanical stop axis 3 (lower arm)
B	Mechanical stops axis 2 (lower arm)

© Copyright 2009-2010 ABB. All rights reserved.

2.5 Electrical connections

2.5.1. Robot cabling and connection points

Introduction

Connect the robot and the controller to each other after securing them to the foundation. The lists specify which cables to use for each respective application.

Connection point locations

For information about the connection point locations, see the chapter *Circuit diagram*.

Main cable categories

All cables between the robot and controller are divided into the following categories:

Cable category	Description
Robot cables	Handles power supply to, and the control of the robot's motors as well as feedback from the encoder interface board. Specified in the table in *Robot cable, power on page 70*.

The cable categories are divided into sub-categories. See *Robot cables on page 70*.

Robot cables

The robot cable is included in the standard delivery of the robot. They are completely pre-manufactured and ready to plug in.

Cable sub-category	Description	Connection point, cabinet	Connection point, robot
Robot cable, power	Transfers drive power from the drive units in the control cabinet to the robot motors	XS1	R1.MP
Robot cable, signal	Transfers encoder data from and power supply to the encoder interface board.	XS2	R1.SMB

Robot cable, power

Cable	Art. no.
Robot cable, power: L=3 m	3HAC032694-001
Robot cable, power: L=7 m	3HAC032695-001
Robot cable, power: L=15 m	3HAC032696-001

Robot cable, signal

Cable	Art. no.
Robot cable, signal: L=3 m	3HAC035320-001
Robot cable, signal: L=7 m	3HAC2493-1
Robot cable, signal: L=15 m	3HAC2530-1

© Copyright 2009-2010 ABB. All rights reserved.

2.5.2. Customer connections on robot

Introduction

The customer cables are integrated in the robot and the connectors are placed on the upper arm housing and at the base.

Connectors

The tables describes the connectors on base and upper arm housing.

Connectors, base

Position	Description	Art. no.
Robot	UTOW71210PH06 pin connector 10p, bulkhead	3HAC022117-002
Customer connector	Connector set R1.CP/CS	3HAC037038-001

Connectors, upper arm housing

Position	Description	Art. no.
Robot	UTOW01210SH05 socket connector 10p, flange mounted	3HAC023624-002
Customer connector	Connector set R3.CP/CS	3HAC037070-001

Air, connector

Position	Description	Art. no.
Robot	4xM5	
Customer cable	SMC KJS04-M5 air connector	3HAC032049-001

© Copyright 2009-2010 ABB. All rights reserved.

Continues on next page

Continued

Customer connections

The location of the customer connections on the base and at the upper arm housing, are shown in the figures:

Customer connections, base

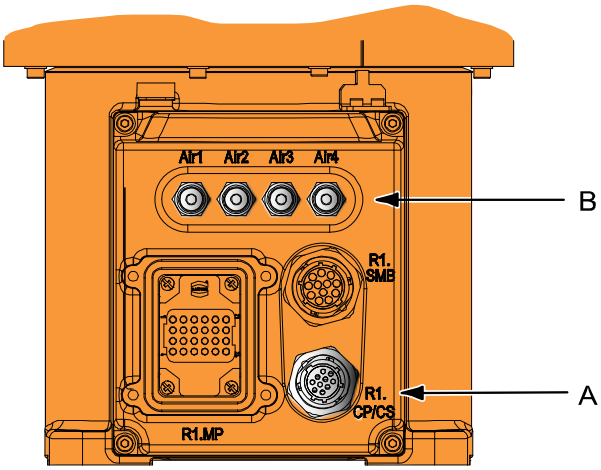

xx0900000639

Customer connections, base.

Pos	Connection	Description	Number	Value
A	R1.CP/CS	Customer power/signal	10	49 V, 500 mA
B	Air	Max 5 bar	4	Inner house diameter 4 mm

Customer connections, upper arm housing

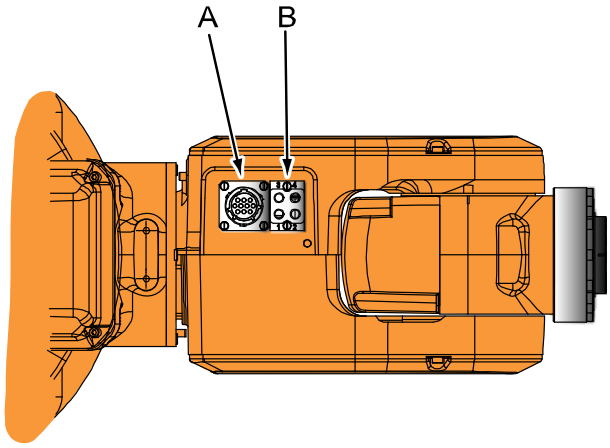

xx0900000640

Customer connections, upper arm housing.

Pos	Connection	Description	Number	Value
A	R3.CP/CS	Customer power/signal	10	49 V, 500 mA
B	Air	Max 5 bar	4	Inner house diameter 4 mm

© Copyright 2009-2010 ABB. All rights reserved.

3 Maintenance

3.1. Introduction

Structure of this chapter

This chapter details all maintenance activities recommended for the manipulator.

It is based on the maintenance schedule located at the beginning of the chapter. The schedule contains information about required maintenance activities including intervals and refers to procedures for the activities.

Each procedure contains all the information required to perform the activity, that is, required tools and materials.

The procedures are gathered in different sections and divided according to the maintenance activity.

Safety information

Before any service work is commenced, it is extremely important that all safety information is observed!

There are general safety aspects that must be read through, as well as more specific safety information that describes the danger and safety risks when performing the procedures. Read the chapter *Safety on page 15* before performing any service work.

NOTE!

If the robot is connected to power, always make sure that the robot is connected to *earth* before starting any maintenance work!

For more information see:

- Product manual - IRC5
- Product manual - IRC5 Compact
- Product manual - Panel Mounted Controller

© Copyright 2009-2010 ABB. All rights reserved.

3.2 Maintenance schedule and expected component life

3.2.1. Specification of maintenance intervals

Introduction

The intervals are specified in different ways depending on the type of maintenance activity to be carried out and the working conditions of the manipulator:

- Calendar time: specified in months regardless of whether the manipulator system is run or not
- Operating time: specified in operating hours. More frequent running of the manipulator means more frequent maintenance activities.

© Copyright 2009-2010 ABB. All rights reserved.

3.2.2. Maintenance schedule

General

The robot, consisting of robot and controller cabinet, must be maintained regularly to ensure its function. The maintenance activities and their respective intervals are specified in the table below.

Non-predictable situations also give rise to inspections of the robot. Any damages must be attended to immediately!

The inspection intervals *do not* specify the life of each component.

Activities and intervals, standard equipment

The sections referred to in the table can be found in the different chapters for every maintenance activity.

The table below specifies the required maintenance activities and intervals:

Maintenance activity	Equipment	Interval	Detailed in section:
Inspection	Damper, axes 1, 2 and 3	Regularly [1)]	*Inspecting dampers on page 81*
Inspection	Cable harnesses	Regularly [1)]	*Inspection, robot cabling on page 77*
Inspection	Timing belts	12 months	*Inspecting timing belts on page 83*
Inspection	Plastic covers	Regularly [1)]	*Inspecting plastic covers on page 85*
Inspection	Mechanical stop pins	Regularly [1)]	*Inspecting mechanical stops on page 78*
Replacement	Battery pack, Measurement system	Battery low alert [2)]	*Replacing the battery pack on page 89*
Cleaning	Complete robot	Regularly [1)]	*Cleaning, robot on page 91*

1)

"Regularly" implies that the activity is to be performed regularly, but the actual interval may not be specified by the robot manufacturer. The interval depends on the operation cycle of the robot, its working environment and movement pattern.

Generally, the more contaminated environment, the shorter intervals. The more demanding movement pattern (sharper bending cable harness), the shorter intervals.

2)

Battery low alert (38213 Battery charge low) is displayed when remaining backup capacity (robot powered off) is less than 2 months. Typical lifetime of a new battery is 36 months if the robot is powered off 2 days/week or 18 months if the robot is powered off 16 h/day. The lifetime can be extended (approx. 3 times) for longer production breaks by a battery shutdown service routine. See Operating manual - IRC5 with FlexPendant for instructions..

© Copyright 2009-2010 ABB. All rights reserved.

3.2.3. Expected component life

General

The life of any component depends on how hard it is run, and it can vary greatly.

Expected component life

Component	Expected life	Note
Cable harness Normal usage [1]	30,000 hours [3]	Not including: • Optional upper arm harnesses.
Cable harness Extreme usage [2]	15,000 hours [3]	Not including: • Optional upper arm harnesses.
Gearboxes	30,000 hours	

[1] Examples of "normal usage" in regard to movement: most material handling applications.

[2] Examples of "extreme usage" in regard to movement: presstending, very severe palletizing applications, major use of axis 1 movement.

[3] Severe chemical, thermal or similar environments, can result in shortened life expectancy.

© Copyright 2009-2010 ABB. All rights reserved.

3.3 Inspection activities

3.3.1. Inspection, robot cabling

Location, robot cabling

The robot cabling comprises the cabling between the robot and controller cabinet.

Required equipment

Equipment	Note
Standard toolkit	The content is defined in the section *Standard toolkit on page 191*.
Other tools and procedures may be required. See references to these procedures in the step-by-step instructions below.	These procedures include references to the tools required.
Circuit diagram	See the chapter *Circuit diagram*.

Inspection, robot cabling

Use this procedure to inspect the robot cabling.

	Action	Note
1.	**DANGER!** Turn off all electric power, hydraulic and pneumatic pressure supplies to the robot!	
2.	Visually inspect: • the control cabling between the robot and control cabinet Look for abrasions, cuts or crush damages.	
3.	Replace the cabling if wear or damage is detected.	

© Copyright 2009-2010 ABB. All rights reserved.

3.3.2. Inspecting mechanical stops

Location of mechanical stops

The mechanical stops on axes 1, 2 and 3 are located as shown in the figures.

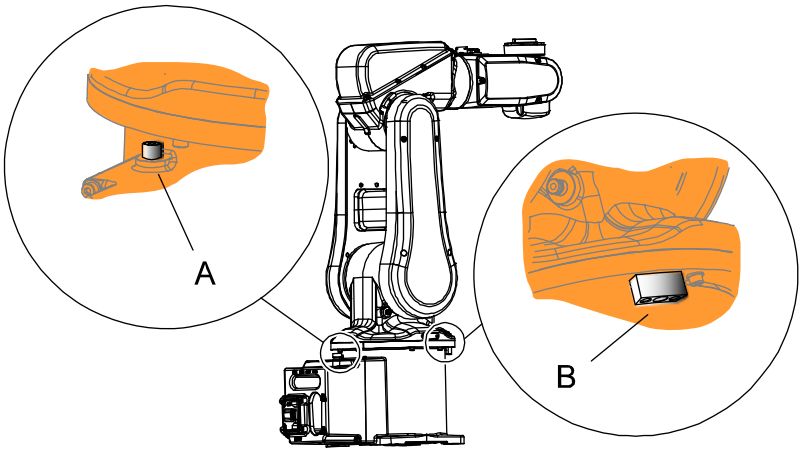

xx1000000002

A	Mechanical stop axis 1 (base)
B	Mechanical stop axis 1 (swing plate)

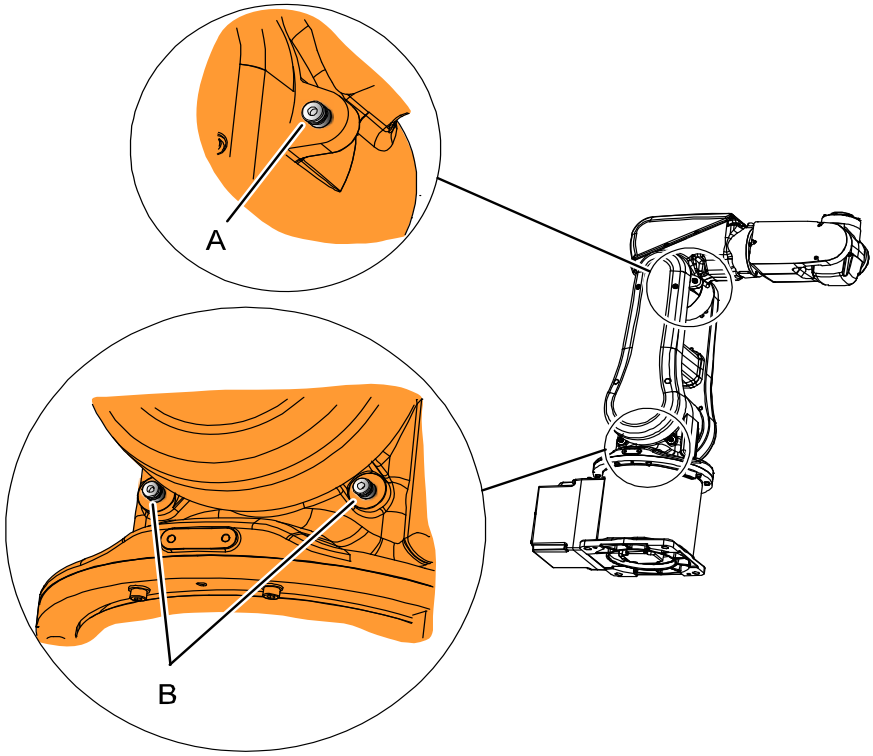

xx0900000583

A	Mechanical stop axis 3 (upper arm)
B	Mechanical stops axis 2 (swing housing)

© Copyright 2009-2010 ABB. All rights reserved.

Continues on next page

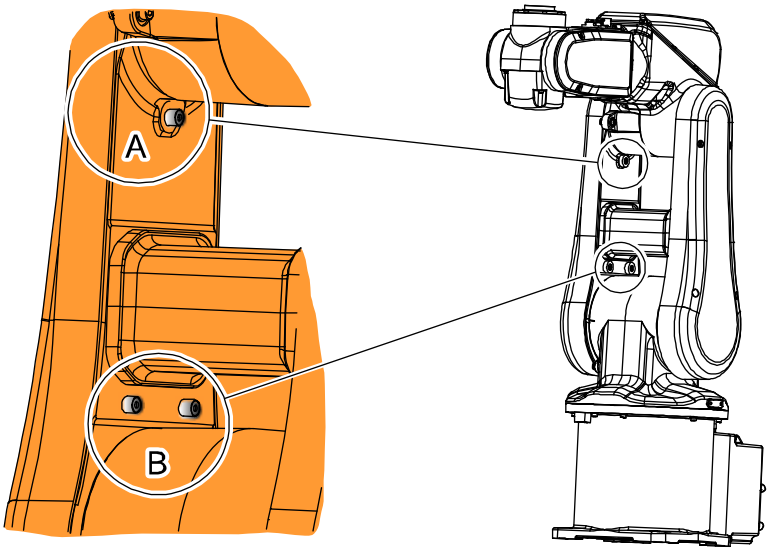

xx10000000003

A	Mechanical stop axis 3 (lower arm)
B	Mechanical stops axis 2 (lower arm)

Required equipment

Equipment	Note
Mechanical stop, axis 1	For art. no. see: • *Spare parts - Axes 1 and 2 on page 195*
Mechanical stop, axes 2-3	For art. no. see: • *Spare parts - Axis 3 on page 197*
Standard toolkit	The content is defined in the section *Standard toolkit on page 191*.

© Copyright 2009-2010 ABB. All rights reserved.

Continues on next page

Continued

Inspecting mechanical stops

Use this procedure to inspect mechanical stops on axes 1, 2 and 3.

	Action	Info
1.	**DANGER!** Turn off all electric power, hydraulic and pneumatic pressure supplies to the robot!	
2.	Inspect the *mechanical stops*.	See the figures in: • *Location of mechanical stops on page 78*
3.	Replace if the mechanical stop is: • bent • loose • damaged. **NOTE!** The expected life of gearboxes can be reduced as a result of collisions with the mechanical stop.	

© Copyright 2009-2010 ABB. All rights reserved.

3.3.3. Inspecting dampers

Location of dampers

The location of dampers are shown in the figures.

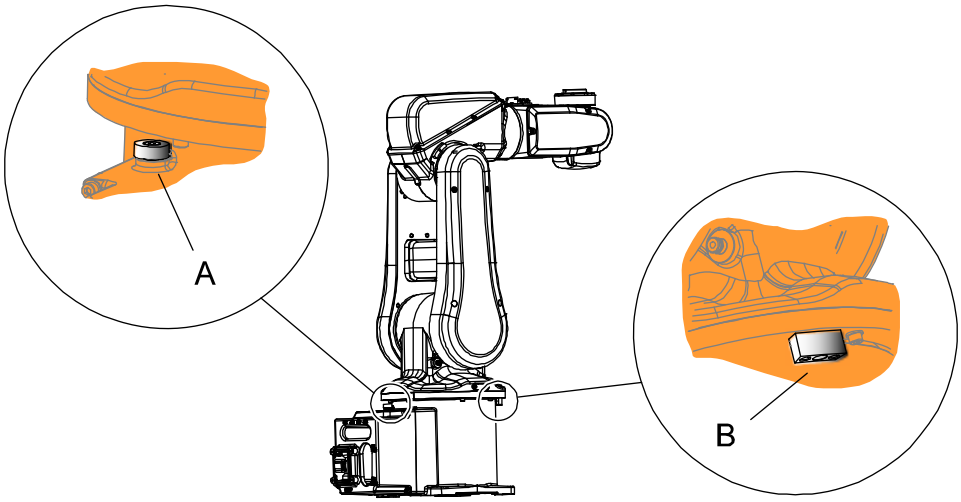

xx0900000579

A	Damper, axis 1
B	Mechanical stop axis 1 (swing plate)

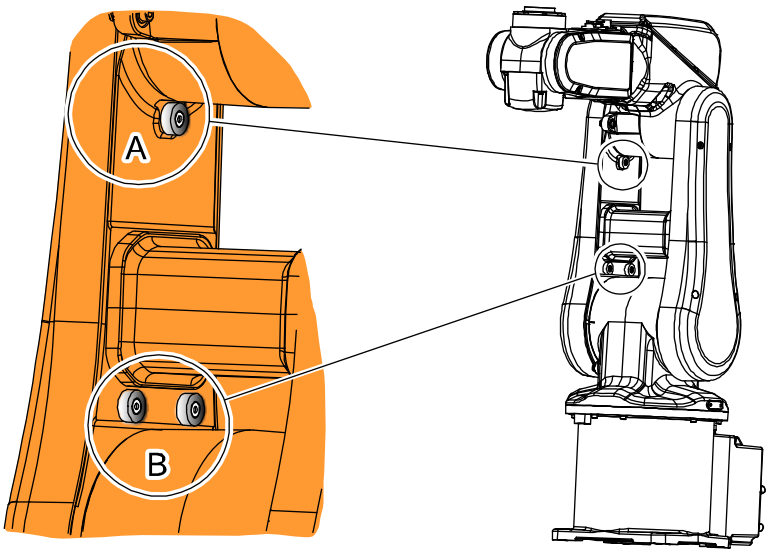

xx0900000582

A	Damper, axis 3
B	Dampers, axis 2

Required equipment

Equipment	Art. no.	Note
Standard toolkit	-	The content is defined in the section *Standard toolkit on page 191*.

Continues on next page

© Copyright 2009-2010 ABB. All rights reserved.

Inspecting dampers

Use this procedure to inspect the dampers.

	Action	Info
1.	**DANGER!** Turn off all electric power, hydraulic and pneumatic pressure supplies to the robot!	
2.	Check all *dampers* for damage such as: • cracks • existing impressions larger than 1 mm.	See the figure in: • *Location of dampers on page 81*
3.	Check all *attachment screws* for deformation.	
4.	If any damage is detected, the damper must be replaced with a new one!	

© Copyright 2009-2010 ABB. All rights reserved.

3.3.4. Inspecting timing belts

Location of timing belts

Axes 3 and 5 are fitted with timing belts. These are located as shown in the figures.

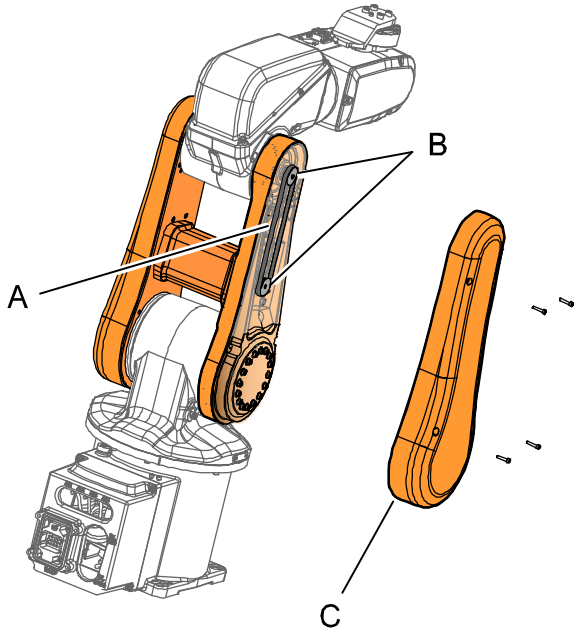

xx0900000610

A	Timing belt, axis 3
B	Timing belt pulley (2 pcs)
C	Lower arm cover

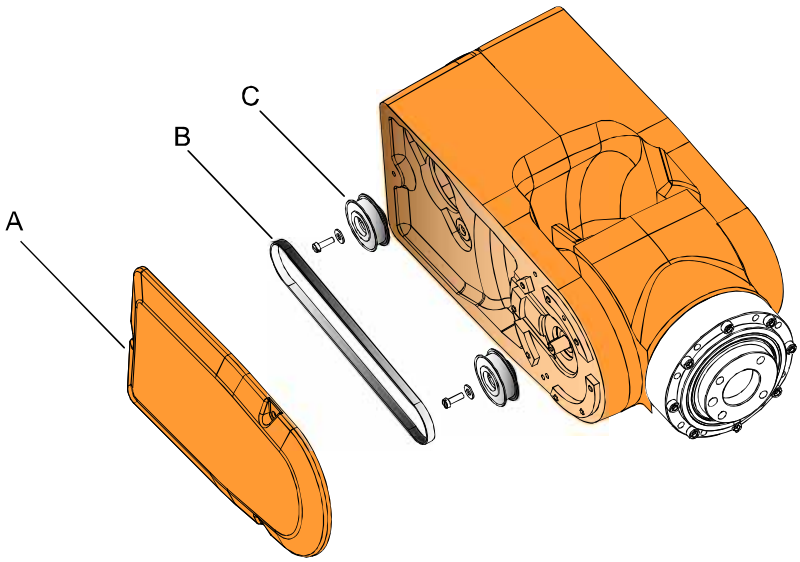

xx0900000611

A	Wrist side cover
B	Timing belt, axis 5
C	Timing belt pulley (2 pcs)

Continues on next page

© Copyright 2009-2010 ABB. All rights reserved.

Required equipment

Equipment	Note
Standard toolkit	The content is defined in the section *Standard toolkit on page 191*.
Other tools and procedures may be required. See references to these procedures in the step-by-step instructions below.	These procedures include references to the tools required.

Timing belt tension

The table describes the timing belt tension on axis 3 and 5.

Axis	Timing belt tension
Axis 3	F = 18-19.8N
Axis 5	F = 7.6-8.4N

Inspecting timing belts

Use this procedure to inspect timing belts.

	Action	Info
1.	**DANGER!** Turn off all electric power, hydraulic and pneumatic pressure supplies to the robot!	
2.	Gain access to each *timing belt* by removing the plastic cover.	See the figure in: • *Location of timing belts on page 83*
3.	Check the timing belts for damage or wear.	
4.	Check the *timing belt pulleys* for damage.	See the figure in: • *Location of timing belts on page 83*
5.	If any damage or wear is detected, the part must be replaced!	
6.	Check each belt for tension. If the belt tension is not correct, adjust it!	For tension values, see: • *Timing belt tension on page 84*

© Copyright 2009-2010 ABB. All rights reserved.

3.3.5. Inspecting plastic covers

Location of plastic covers

Plastic covers are located as shown in the figure.

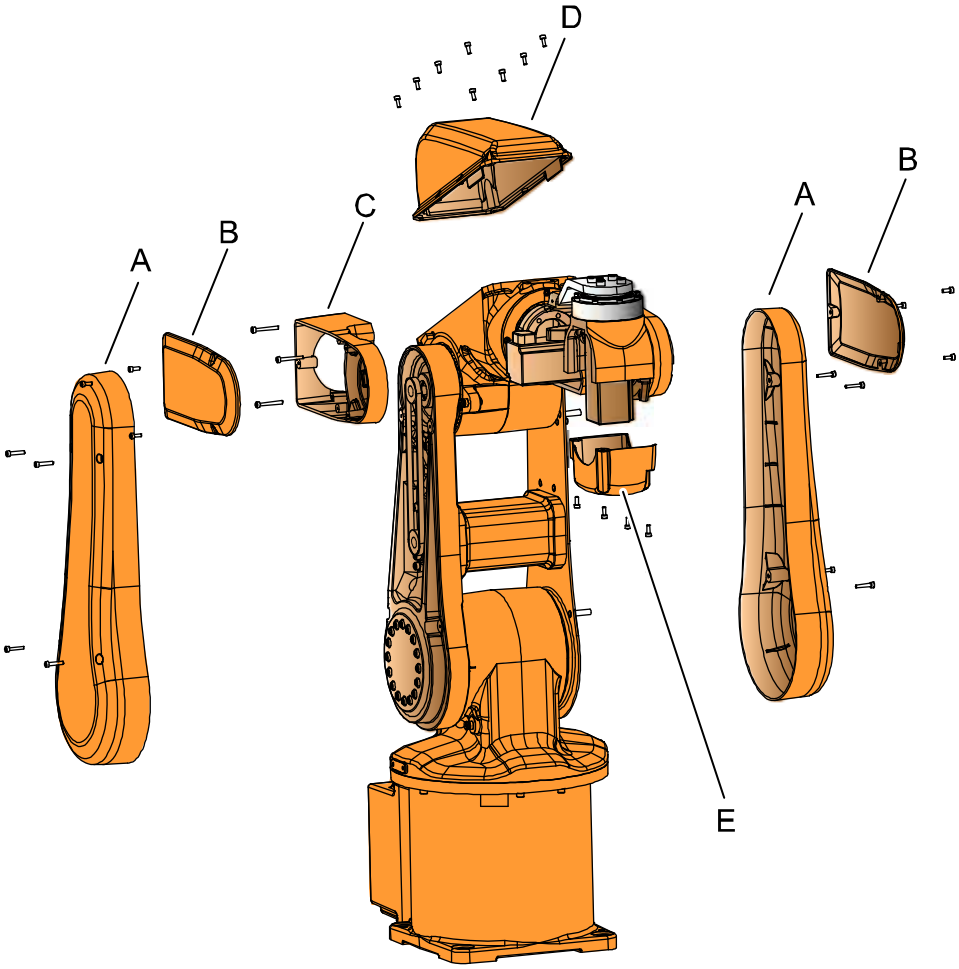

xx0900000607

A	Lower arm cover (2 pcs)
B	Wrist side cover (2 pcs)
C	Wrist support
D	Housing cover
E	Tilt cover

© Copyright 2009-2010 ABB. All rights reserved.

Continues on next page

Continued

Inspecting plastic covers

Use this procedure to inspect the plastic covers on the robot.

	Action	Info
1.	**DANGER!** Turn off all electric power, hydraulic and pneumatic pressure supplies to the robot!	
2.	Check the plastic covers for: • cracks • other kind of damage.	
3.	Replace the plastic cover if cracks or damage is detected.	

© Copyright 2009-2010 ABB. All rights reserved.

3.4 Replacement/changing activities

3.4.1. Type of grease in gearboxes

Introduction

The gearboxes of the robot contains grease.

This section describes:

- *Location of gearboxes on page 87*
- *Type and amount of grease on page 88*.

Location of gearboxes

The gearboxes are located as shown in the figure:

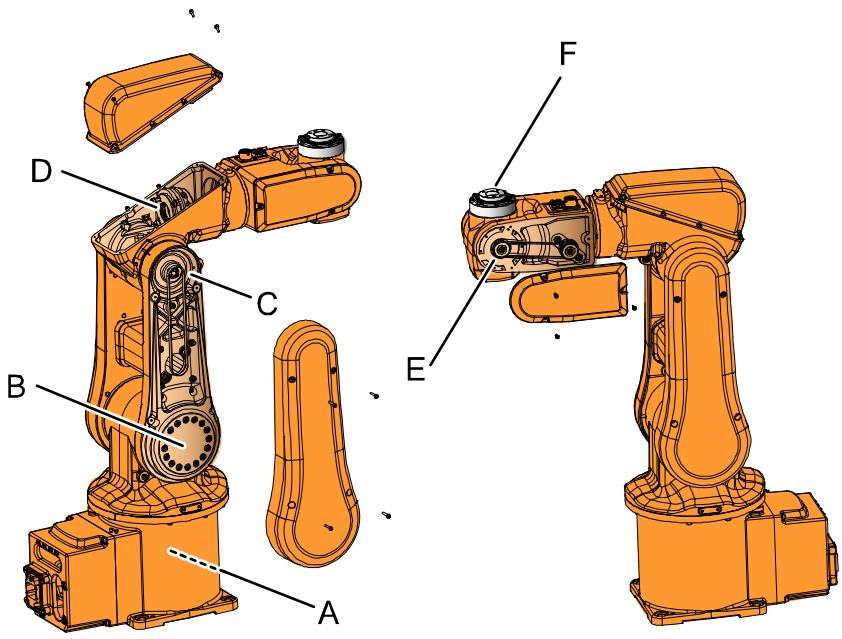

xx0900000612

A	Gearbox. axis 1 (inside the base)
B	Gearbox, axis 2
C	Gearbox, axis 3
D	Gearbox, axis 4
E	Gearbox, axis 5
F	Gearbox, axis 6

© Copyright 2009-2010 ABB. All rights reserved.

Continues on next page

Type and amount of grease

The type and amount of grease in the gearboxes are described in the table:

Gearbox	Art. no.	Type of grease	Amount	Note
Axis 1	3HAC031695-001	Harmonic grease 4B No.2	58 grams	Unit conversion: • 1 gram = 0.035 ounces
Axis 2	3HAC031695-001	Harmonic grease 4B No.2	40 grams	Unit conversion: • 1 gram = 0.035 ounces
Axis 3	3HAC031695-001	Harmonic grease 4B No.2	10 grams	Unit conversion: • 1 gram = 0.035 ounces
Axis 4	3HAC031695-001	Harmonic grease 4B No.2	3.5 grams	Unit conversion: • 1 gram = 0.035 ounces
Axis 5	3HAC031695-001	Harmonic grease 4B No.2	5 grams	Unit conversion: • 1 gram = 0.035 ounces
Axis 6	3HAC031695-001	Harmonic grease 4B No.2	3.5 grams	Unit conversion: • 1 gram = 0.035 ounces

© Copyright 2009-2010 ABB. All rights reserved.

3.4.2. Replacing the battery pack

Location of the battery pack

The location of the battery pack is inside the base cover as shown in the figure.

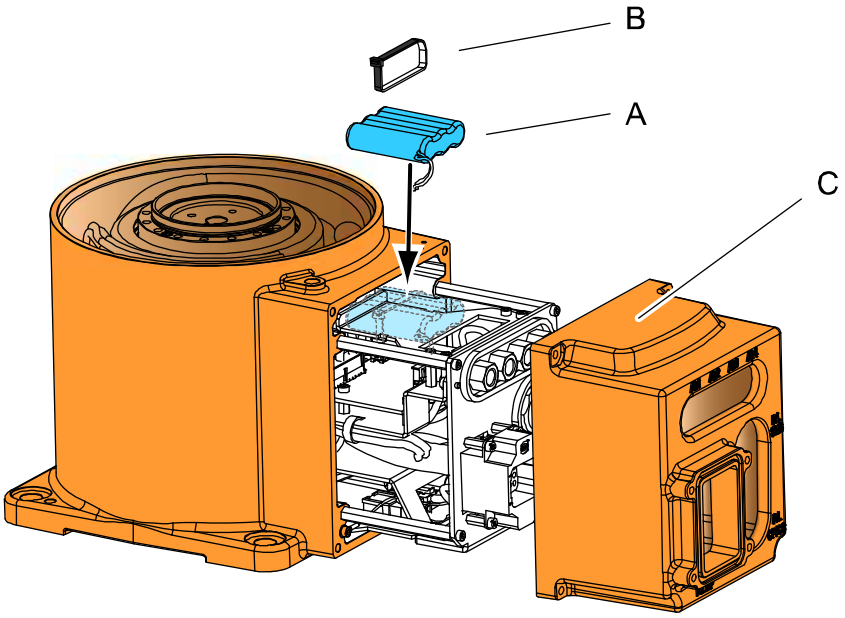

xx0900000588

A	Cable strap
B	Battery pack
C	Base cover

Required equipment

Equipment	Note
Standard toolkit	The content is defined in the section *Standard toolkit on page 191*.
Other tools and procedures may be required. See references to these procedures in the step-by-step instructions below.	These procedures include references to the tools required.

© Copyright 2009-2010 ABB. All rights reserved.

Continues on next page

Removing the battery pack

Use this procedure to remove the battery pack.

	Action	Info
1.	**DANGER!** Turn off all electric power, hydraulic and pneumatic pressure supplies to the robot!	
2.	Remove the *base cover* from the robot by removing its attachment screws.	The *battery pack* is located inside the base cover as shown in the figure in: • *Location of the battery pack on page 89*
3.	Disconnect the battery cable from the Encoder Interface Board.	
4.	Cut the cable strap.	
5.	Remove the battery pack.	

Refitting the battery pack

Use this procedure to refit the battery pack.

	Action	Info
1.	Fit the new battery pack with a *cable strap*.	See the figure in: • *Location of the battery pack on page 89*
2.	Connect the battery cable to the Encoder Interface Board.	
3.	Refit the *base cover* to the robot with its attachment screws.	See the figure in: • *Location of the battery pack on page 89*
4.	Update the revolution counters.	

© Copyright 2009-2010 ABB. All rights reserved.

3.5 Cleaning activities

3.5.1. Cleaning, robot

WARNING!

Turn off all electrical power supplies to the manipulator before entering the manipulators work space!

General

To secure high uptime it is important that the robot is cleaned regularly. The frequency of cleaning depends on the environment that the robot is working in.

Depending on the protection of the robot, different methods of cleaning of the robot are allowed. This section describes how to clean a *standard* robot.

NOTE!

Always check the serial number sign for verification about the robot protection class.

Cleaning activities

The instruction specifies the allowed cleaning methods for the robot.

Cleaning method	Standard robot
Vacuum cleaner	Yes
Wiping with cloth	Yes. Use light cleaning detergent.

Cables

Movable cables need to be able to move freely:

- Remove waste material, for example sand, dust, and chips, if it prevents cable movement.
- Clean the cables if they have a crusty surface for example from dry release agents.

© Copyright 2009-2010 ABB. All rights reserved.

© Copyright 2009-2010 ABB. All rights reserved.

4 Repair

4.1. Introduction

Structure of this chapter

This chapter details all repair activities recommended for the robot and any external units of the robot.

It is made up of separate procedures, each detailing a specific repair activity. Each procedure contains all the information required to perform the activity, for example spare parts numbers, required special tools and materials.

The procedures are gathered in sections, divided according to the component location on the robot.

Required equipment

All equipment required to perform a specific repair activity is listed together with the current procedure.

The equipment is also gathered in different lists in chapter *Reference information*.

Safety information

Before any service work is commenced, it is extremely important that all safety information is read!

There are general safety aspects that must be read through, as well as more specific safety information that describes the danger and safety risks when performing specific steps in a procedure. Make sure to read through the chapter *Safety on page 15* before commencing any service work.

NOTE!

If the robot is connected to power, always make sure that the robot is connected to *earth* before starting any repair work!

For more information see:

- Product manual - IRC5
- Product manual - IRC5 Compact

© Copyright 2009-2010 ABB. All rights reserved.

4.2 General procedures

4.2.1. Mounting instructions for seals

General

This section details how to mount different types of seals onto the robot.

Equipment

Equipment, etc.	Art. no.	Note
Grease	3HAB3537-1	Used to lubricate the seals.

Rotating seals

The procedure below details how to fit rotating seals.

CAUTION!

Please observe the following before commencing any assembly of seals:

- Protect the sealing surfaces during transport and mounting.
- Keep the seal in its original wrappings or protect it well before actual mounting.
- The fitting of seals and gears must be carried out on clean workbenches.
- Use a protective sleeve for the sealing lip during mounting, when sliding over threads, keyways, etc.

	Action	Note
1.	Check the seal to ensure that: • the seal is of the correct type (provided with cutting edge). • there is no damage to the sealing edge (feel with a fingernail).	
2.	Inspect the sealing surface before mounting. If scratches or damage are found, the seal must be replaced since it may result in future leakage.	
3.	Lubricate the seal with *grease* just before fitting. (Not too early - there is a risk of dirt and foreign particles adhering to the seal.) Fill 2/3 of the space between the dust tongue and sealing lip with grease. The rubber coated external diameter must also be greased, unless otherwise specified.	Art. no. is specified in *Equipment on page 94*.
4.	Mount the seal correctly with a mounting tool. Never hammer directly on the seal as this may result in leakage.	

© Copyright 2009-2010 ABB. All rights reserved.

Continues on next page

Flange seals and static seals

The procedure below details how to fit flange seals and static seals.

	Action
1.	Check the flange surfaces. They must be even and free from pores. It is easy to check flatness using a gauge on the fastened joint (without sealing compound). If the flange surfaces are defective, the parts may not be used because leakage could occur.
2.	Clean the surfaces properly and in accordance with ABB recommendations.
3.	Distribute the sealing compound evenly over the surface, preferably with a brush.
4.	Tighten the screws evenly when fastening the flange joint.

O-rings

The procedure below details how to fit o-rings.

	Action	Note
1.	Ensure that the correct o-ring size is used.	
2.	Check the o-ring for surface defects, burrs, shape accuracy, etc.	Defective o-rings may not be used.
3.	Check the o-ring grooves. The grooves must be geometrically correct and free from pores and contamination.	Defective o-rings may not be used.
4.	Lubricate the o-ring with grease.	
5.	Tighten the screws evenly when assembling.	

© Copyright 2009-2010 ABB. All rights reserved.

4.3 Cable harness

4.3.1. Removing the cable harness

Introduction

These procedures describes how to remove the complete cable harness in:

1. the wrist - *Removing the cable harness in the wrist on page 97*
2. the upper arm housing - *Removing the cable harness in the upper arm housing on page 102*
3. the lower arm and swing plate - *Removing the cable harness in the lower arm on page 104*
4. the base - *Removing the cable harness in the base on page 106*.

NOTE!

It is necessary to perform the removing in the order as listed above!

Location of the cable harness.

The cable harness is located as shown in the figure.

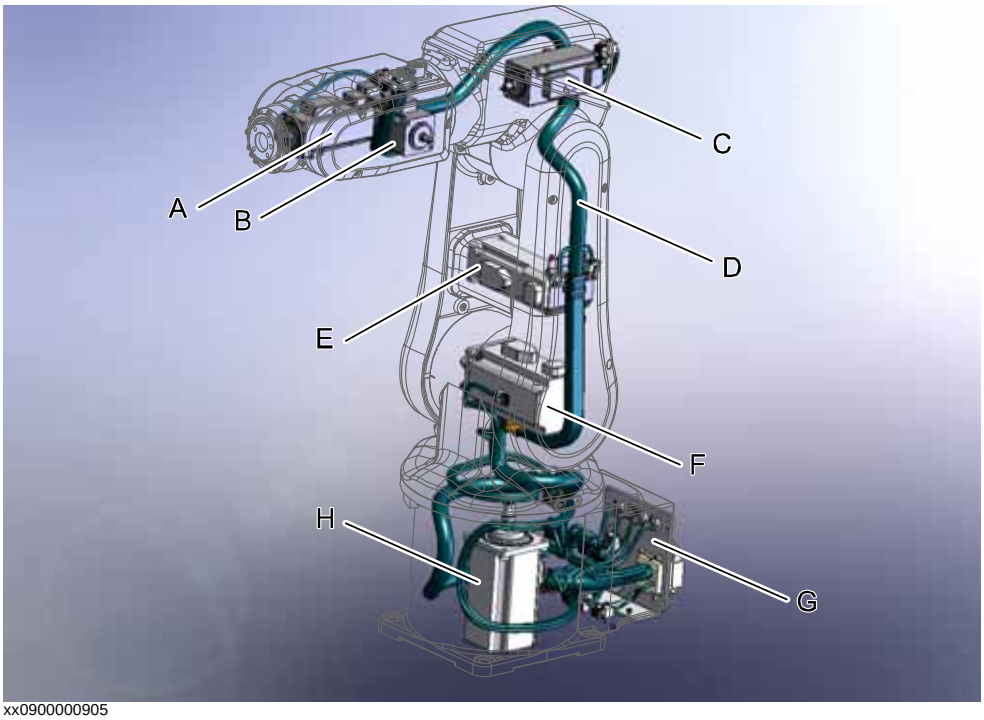

xx0900000905

A	Motor axis 6
B	Motor axis 5
C	Motor axis 4
D	Cable harness
E	Motor axis 3
F	Motor axis 2
G	Plate (part of the cable harness)
H	Motor axis 1

Continues on next page

© Copyright 2009-2010 ABB. All rights reserved.

Required equipment

Equipment	Note
Standard toolkit	The content is defined in the section *Standard toolkit on page 191*.
Other tools and procedures may be required. See references to these procedures in the step-by-step instructions below.	These procedures include references to the tools required.
Loctite 7063	For removing residues of Loctite.
Loctite 574	
Cable grease	

Removing the cable harness in the *wrist*

Use this procedure to remove the cable harness in the *wrist*.

	Action	Info
1.	Move axis 5 to a 90° position.	
2.	**DANGER!** Turn off all electric power, hydraulic and pneumatic pressure supplies to the robot!	
3.	Remove the *wrist side covers* on both sides.	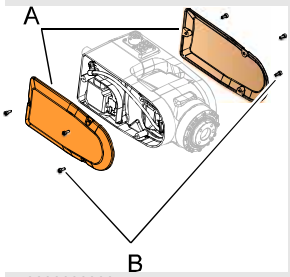 xx0900000999 Parts: • A: Wrist side covers (2 pcs) • B: Attachment screws (3 + 3 pcs)

© Copyright 2009-2010 ABB. All rights reserved.

Continues on next page

4.3.1. Removing the cable harness

Continued

	Action	Info
4.	Remove the *tilt cover*.	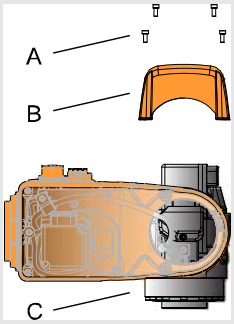 xx0900000901 Parts: • A: Attachment screws(4 pcs) • B: Tilt cover • C: Motor axis 6
5.	Unscrew the *attachment screw* securing the *clamp* at motor axis 5.	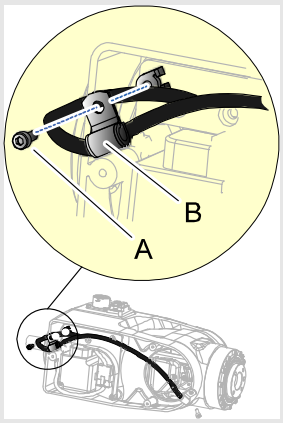 xx0900000912 Parts: • A: Attachment screw • B: Clamp
6.	Remove the *connector support* at axis 5.	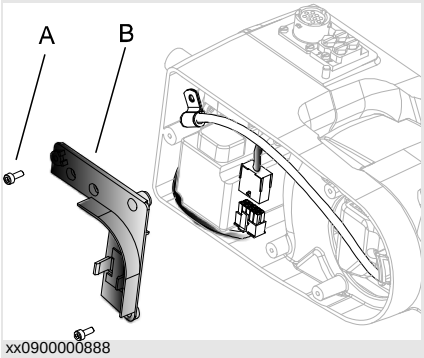 xx0900000888 Parts: • A: Attachment screws (2 pcs) • B: Connector support

© Copyright 2009-2010 ABB. All rights reserved.

Continues on next page

Continued

	Action	Info
7.	Remove the *wrist housing (plastic)*.	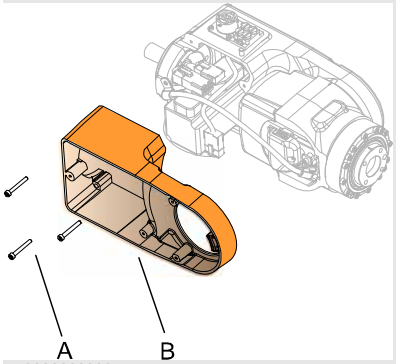 xx0900000900 Parts: • A: Attachment screws (3 pcs) • B: Wrist housing (plastic)
8.	Remove the *connector cover*.	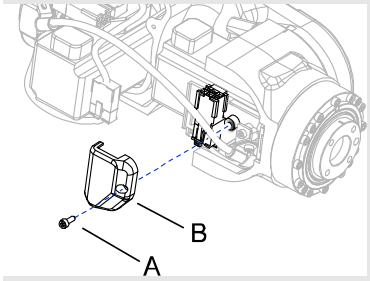 xx0900000902 Parts: • A: Attachment screw • B: Connector cover
9.	Unscrew the *attachment screw* securing the *clamp* at motor axis 6.	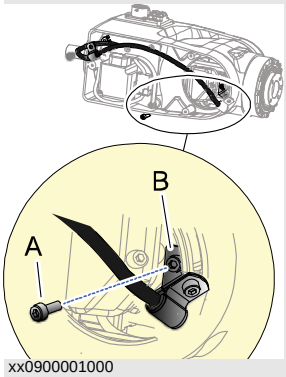 xx0900001000 Parts: • A: Attachment screw • B: Clamp
10.	Disconnect connectors: • R2.MP5 and R2. ME5, motor axis 5 • R2.MP6 and R2. ME6, motor axis 6.	

© Copyright 2009-2010 ABB. All rights reserved.

Continues on next page

4.3.1. Removing the cable harness

Continued

	Action	Info
11.	Remove the *connector support* at axis 6. **TIP!** When removing the connector support rotate axis 5 to a 90° position. This is the most convenient position to remove the attachment screws.	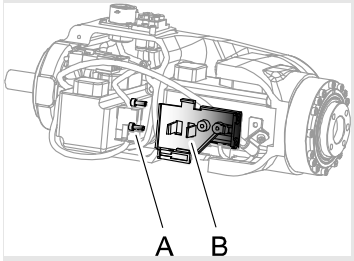 xx0900001020 Parts: • A: Attachment screws (2 pcs) • B: Connector support
12.	Unscrew the *attachment screws* securing *motor axis 5*.	See section: • *Replacing motor axis 5 on page 160* 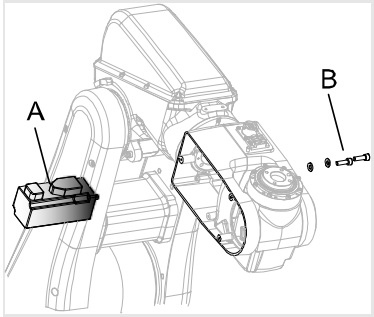 xx0900000889 Parts: • A: Motor axis 5 • B: Attachment screws and washers (2 + 2 pcs)
13.	Remove the *timing belt*.	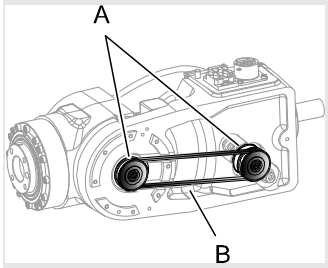 xx09000001019 Parts: • A: Pulleys (2 pcs) • B: Timing belt
14.	Remove motor axis 5.	See section: • *Replacing motor axis 5 on page 160*

© Copyright 2009-2010 ABB. All rights reserved.

Continues on next page

Continued

	Action	Info
15.	Cut the *cable straps*.	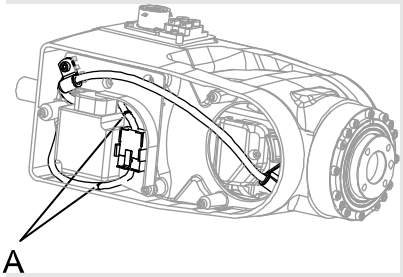 xx0900001009 Parts: • A: Cable straps
16.	Disconnect: • customer contact R2.CS • air hose.	

© Copyright 2009-2010 ABB. All rights reserved.

Continues on next page

Removing the cable harness in the *upper arm housing*

Use this procedure to remove the cable harness in the *upper arm housing*.

	Action	Info
1.	Unscrew the *attachment screws* securing the *cable bracket* in the housing.	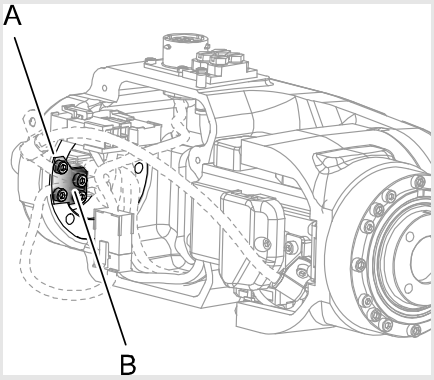 xx0900001018 Parts: • A: Attachment screws (4 pcs) • B: Cable bracket
2.	Remove the *housing cover*.	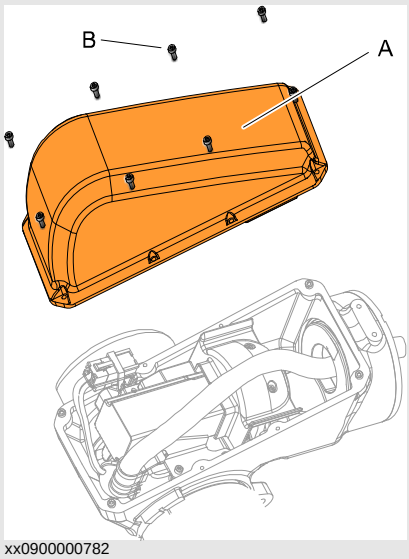 xx0900000782 Parts: • A: Housing cover • B: Attachment screws (8 pcs)
3.	Pull the cable harness out of the wrist housing to axis 4.	
4.	Disconnect connectors: • R2.MP4 • R2.ME4.	

© Copyright 2009-2010 ABB. All rights reserved.

Continues on next page

	Action	Info
5.	Unscrew the *attachment screws* securing the two *cable brackets* on each side of motor axis 4.	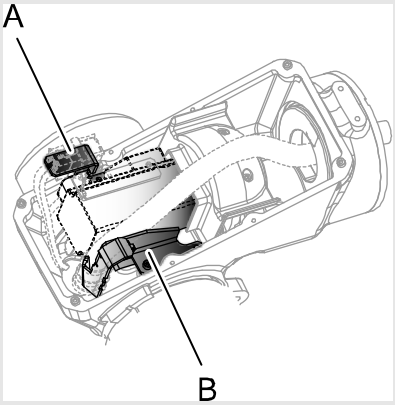 xx0900001023 Parts: • A: Cable bracket • B: Cable bracket
6.	Pull the cable harness out of the upper arm housing.	

© Copyright 2009-2010 ABB. All rights reserved.

Continues on next page

Removing the cable harness in the *lower arm*

Use this procedure to remove the cable harness in the *lower arm*.

	Action	Info
1.	Remove the *lower arm covers*.	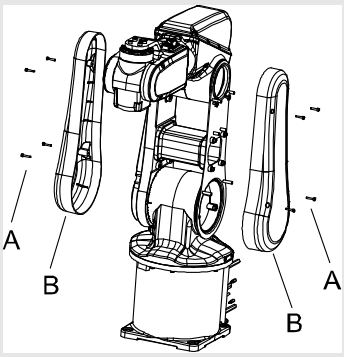 xx0900000848 Parts: • A: Attachment screws (4 + 4 pcs) • B: Lower arm covers (2 pcs)
2.	Pull the *cable harness* out through the upper arm housing to axis 3.	
3.	Detach the *cable bracket* from the lower arm plate.	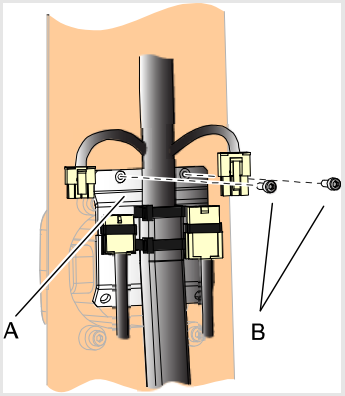 xx0900000879 Parts: • A: Cable bracket • B: Attachment screws (2 pcs)
4.	Disconnect connectors: • R2.MP3 • R2.ME3.	

© Copyright 2009-2010 ABB. All rights reserved.

Continues on next page

Continued

	Action	Info
5.	Detach the *lower arm plate* from the *motor cover*.	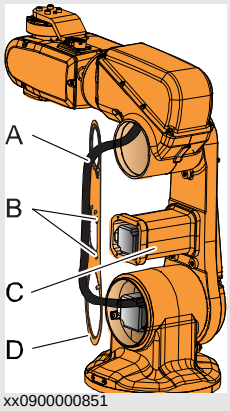 xx0900000851 Parts: • A: Cable harness • B: Holes for attachment screws (4 pcs) • C: Motor cover • D: Lower arm plate
6.	Remove *cable guide*.	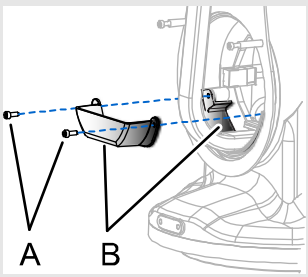 xx0900000857 Parts: • A: Attachment screws (2 pcs) • B: Cable guide

© Copyright 2009-2010 ABB. All rights reserved.

Continues on next page

Removing the cable harness in the *base*

Use this procedure to remove the cable harness in the *base*.

	Action	Info
1.	Pull the cable harness out through the swing housing.	
2.	Separate the *lower* and *upper arms* as well as the *swing housing* from the *base*.	See section: • *Replacing the lower arm on page 129*
3.	Cut the *cable straps* securing the cable harness on the *swing plate*.	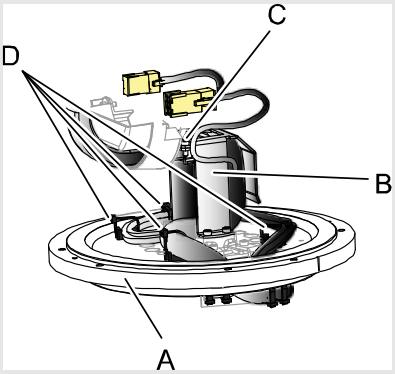 xx0900000884 Parts: • A: Swing plate • B: Cable holder • C: Attachment screws (2 pcs) • D: Cable straps (4 pcs)
4.	Unscrew the *attachment screws* securing the cable harness to the *cable holder*.	
5.	Remove *motor axis 1 with gearbox*.	See section: • *Replacing motor axis 1 with gearbox on page 133*
6.	Remove the *swing plate*.	
7.	Disconnect connectors: • R2.MP1 • R2.ME1.	
8.	Loosen the PE cable.	
9.	Remove the *EIB board*.	See section: • *Replacing the Encoder Interface board on page 116*
10.	Remove the *battery*.	See section: • *Replacing the battery pack on page 89*
11.	Remove the *encoder plate*.	
12.	Remove the *encoder connector* on plate.	
13.	Remove the *complete cable harness*.	

© Copyright 2009-2010 ABB. All rights reserved.

4.3.2. Refitting the cable harness

Introduction

These procedures describes how to refit the complete cable harness in:

1. the base - *Refitting the cable harness in the base on page 108*
2. the lower arm - *Refitting the cable harness in the lower arm on page 110*
3. the upper arm housing and swing plate - *Refitting the cable harness in the upper arm housing on page 111*
4. the wrist - *Refitting the cable harness in the wrist on page 112*.

NOTE!

It is necessary to perform the refitting in the order as listed above!

Location of the cable harness

The cable harness is located as shown in the figure.

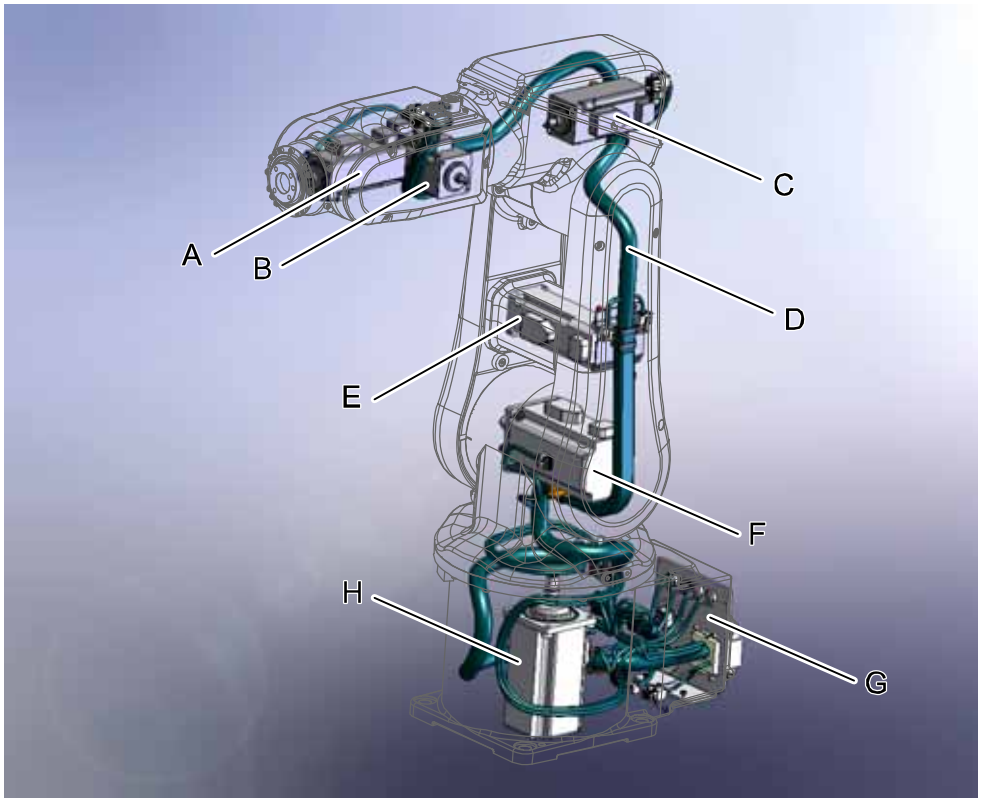

xx0900000905

A	Motor axis 6
B	Motor axis 5
C	Motor axis 4
D	Cable harness
E	Motor axis 3
F	Motor axis 2
G	Plate (part of the cable harness)
H	Motor axis 1

Continues on next page

© Copyright 2009-2010 ABB. All rights reserved.

Required equipment

Equipment	Note
Standard toolkit	The content is defined in the section *Standard toolkit on page 191*.
Other tools and procedures may be required. See references to these procedures in the step-by-step instructions below.	These procedures include references to the tools required.
Loctite 7063	For removing residues of Loctite
Loctite 574	
Cable grease	

NOTE!

Apply some cable grease on the cable harness where wear exists and also on the plastic parts of the robot.

Refitting the cable harness in the *base*

Use this procedure to refit the cable harness in the *base*.

	Action	Info
1.	Check that: • the cable harness and its parts is clean and without damages.	
2.	Refit the *encoder connector* on plate.	
3.	Refit the *encoder plate*.	
4.	Refit the *battery*.	See section: • *Replacing the battery pack on page 89*
5.	Refit the *EIB board*.	See section: • *Replacing the Encoder Interface board on page 116*
6.	Refit the *PE cable*.	
7.	Refit *motor axis 1 with gearbox*.	See section: • *Replacing motor axis 1 with gearbox on page 133*
8.	Reconnect connectors: • R2.MP1 • R2.ME1.	
9.	Refit the *swing plate*.	Tigtening torque: 1 Nm.

© Copyright 2009-2010 ABB. All rights reserved.

Continues on next page

Continued

	Action	Info
10.	Secure the cable harness to the *cable holder* with the *attachment screws*.	Tightening torque: 1 Nm. 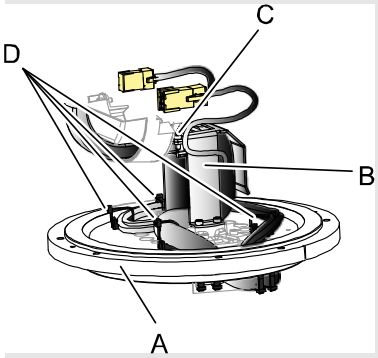 xx0900000884 Parts: • A: Swing plate • B: Cable holder • C: Attachment screws (2 pcs) • D: Cable straps (4 pcs)
11.	Secure the *cable harness* on the *swing plate* with the *cable straps*.	
12.	Refit the *lower arm* to the *swing housing* with its *attachment screws*.	See section: • *Replacing the lower arm on page 129*
13.	Push the cable harness in through the swing housing.	

© Copyright 2009-2010 ABB. All rights reserved.

Continues on next page

Refitting the cable harness in the *lower arm*

Use this procedure to refit the cable harness in the *lower arm*.

	Action	Info
1.	Fit the *cable guide*.	Tightening torque: 1 Nm. 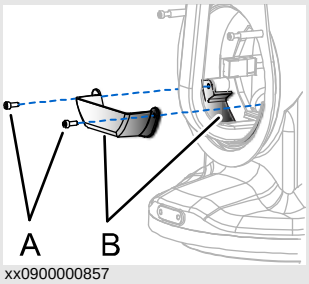 xx0900000857 Parts: • A: Attachment screws (2 pcs) • B: Cable guide
2.	Secure the *lower arm plate* to the *motor cover* with its *attachment screws* .	Tightening torque: 4 Nm. 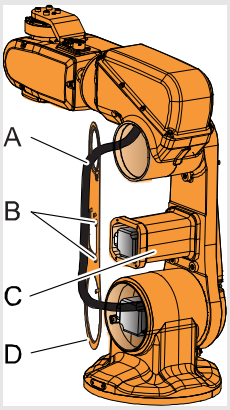 xx0900000851 Parts: • A: Cable harness • B: Holes for attachment screws (4 pcs) • C: Motor cover • D: Lower arm plate
3.	Refit the *cable bracket* to the lower arm plate.	Tightening torque: 1 Nm. 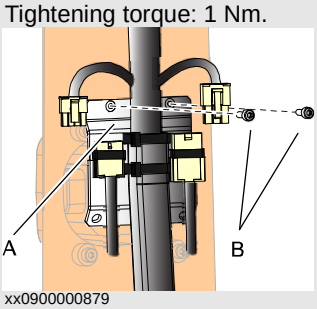 xx0900000879 Parts: • A: Cable bracket • B: Attachment screws (2 pcs)

Continues on next page

© Copyright 2009-2010 ABB. All rights reserved.

Continued

	Action	Info
4.	Reconnect connectors: • R2.MP3 • R2.ME3.	
5.	Push the cable harness in through the upper arm housing.	

Refitting the cable harness in the *upper arm housing*

Use this procedure to refit the cable harness in the *upper arm housing*.

	Action	Info
1.	Refit the two *cable brackets*, one on each side of motor axis 4, with its attachment screws.	Tightening torque: 1 Nm. 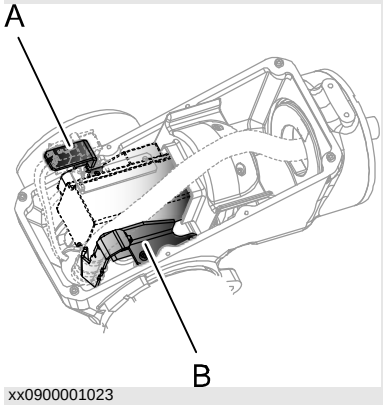 xx0900001023 Parts: • A: Cable bracket • B: Cable bracket
2.	Reconnect connectors: • R2.MP4 • R2.ME4.	
3.	Push the *cable harness* in through the *wrist housing*.	
4.	Refit the *cable bracket* in the housing with its *attachment screws*.	Tightening torque: 1 Nm. 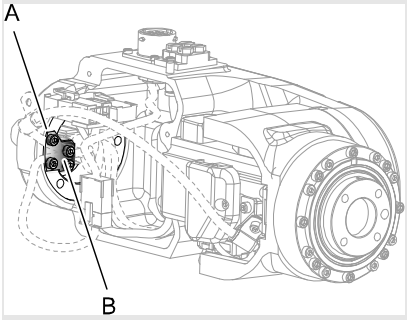 xx0900001018 Parts: • A: Attachment screws (4 pcs) • B: Cable bracket

© Copyright 2009-2010 ABB. All rights reserved.

Continues on next page

Refitting the cable harness in the *wrist*

Use this procedure to refit the cable harness in the *wrist*.

	Action	Info
1.	Reconnect: • customer contact R2.CS • air hoses.	
2.	Secure the cable harness with *cable straps*.	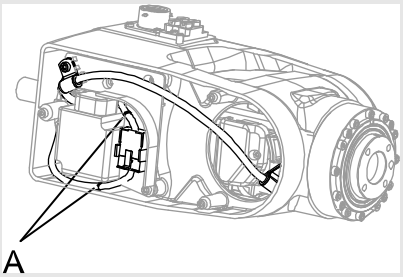 xx0900001009 Parts: • A: Cable straps
3.	Refit *motor axis 5* and *timing belt*.	See section: • *Replacing motor axis 5 on page 160*
4.	Refit the *connector support* at axis 6.	Tightening torque: 1 Nm. 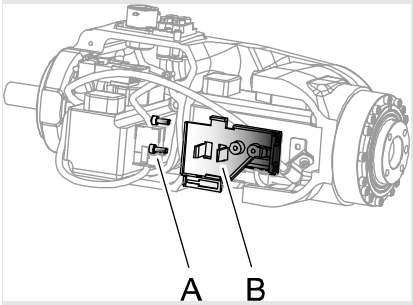 xx0900001020 Parts: • A: Attachment screws (2 pcs) • B: Connector support
5.	Reconnect connectors: • R2.MP5 and R2.ME5, motor axis 5 • R2.MP6 and R2.ME6, motor axis 6.	

© Copyright 2009-2010 ABB. All rights reserved.

Continues on next page

Continued

	Action	Info
6.	Refit the *attachment screw* securing the *clamp* at motor axis 6.	Tightening torque: 1 Nm. 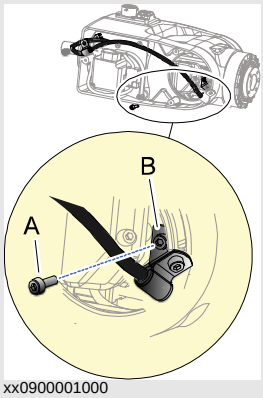 xx0900001000 Parts: • A: Attachment screw • B: Clamp
7.	Refit the *connector cover*.	Tightening torque: 1 Nm. 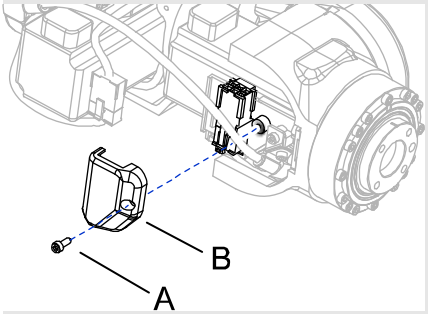 xx0900000902 Parts: • A: Attachment screw • B: Connector cover
8.	Refit *wrist housing (plastic)*.	Tightening torque: 1 Nm. 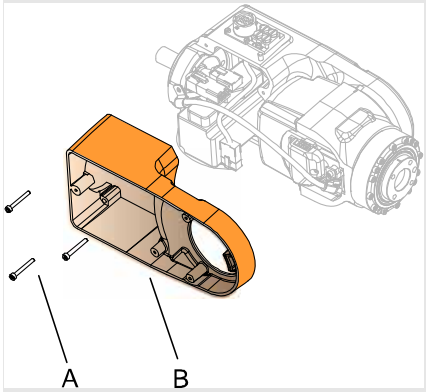 xx0900000900 Parts: • A: Attachment screws (3 pcs) • B: Wrist housing (plastic)

© Copyright 2009-2010 ABB. All rights reserved.

Continues on next page

4.3.2. Refitting the cable harness

Continued

	Action	Info
9.	Refit *connector support* at axis 5.	Tightening torque: 1 Nm. 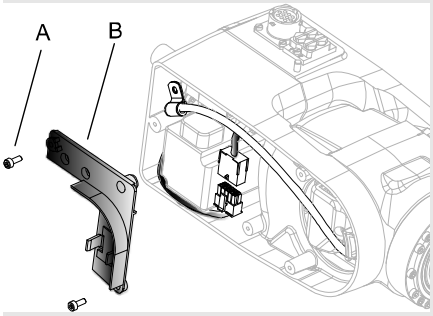 xx0900000888 Parts: • A: Attachment screws (2 pcs) • B: Connector support
10.	Refit the *attachment screw* securing the *clamp* at motor axis 5.	Tightening torque: 1 Nm. 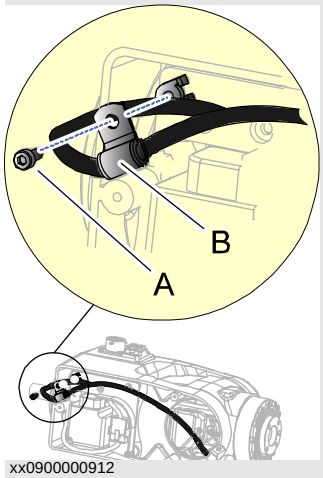 xx0900000912 Parts: • A: Attachment screw • B: Clamp
11.	Refit the *tilt cover*.	Tightening torque: 1 Nm. 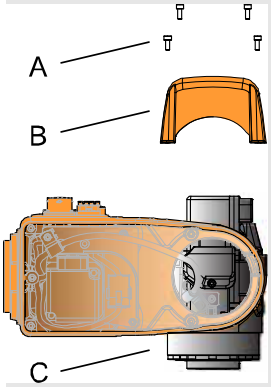 xx0900000901 Parts: • A: Attachment screws (4 pcs) • B: Tilt cover • C: Motor axis 6

Continues on next page

© Copyright 2009-2010 ABB. All rights reserved.

Continued

	Action	Info
12.	Refit the remaining plastic covers: • *wrist side cover* • *housing cover* and • *lower arm cover*.	Tightening torque: 1 Nm
13.	Recalibrate the robot.	See chapter: • *Calibration*
14.	**DANGER!** Make sure all safety requirements are met when performing the first test run. These are further detailed in the section *DANGER - First test run may cause injury or damage! on page 40*.	

© Copyright 2009-2010 ABB. All rights reserved.

4.3.3. Replacing the Encoder Interface board

Introduction

This procedure describes how to replace the Encoder Interface board.

Location of the Encoder Interface board

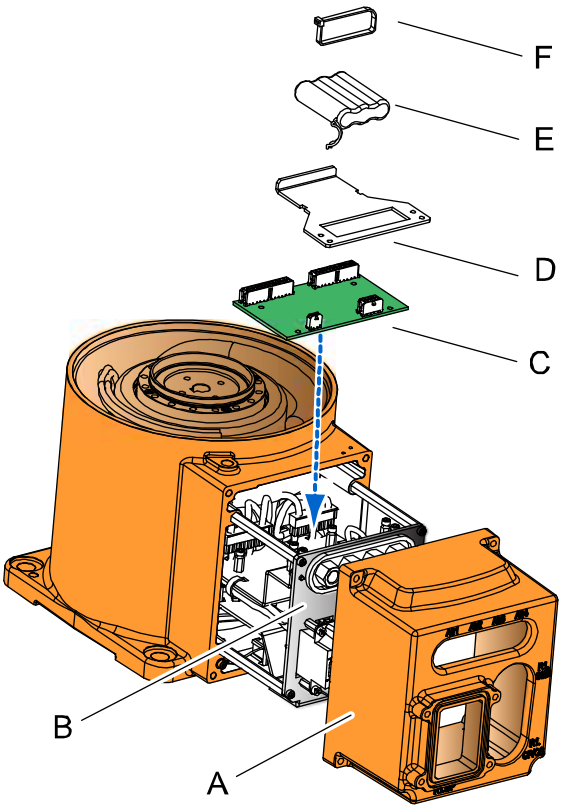

xx0900000842

A	Base cover
B	Plate
C	Encoder Interface Board (EIB board)
D	Bracket
E	Battery pack
F	Cable strap

Required equipment

Equipment	Note
Standard tools	The content is defined in the section *Standard toolkit on page 191*.
Other tools and procedures may be required. See references to these procedures in the step-by-step instructions below.	These procedures include references to the tools required.

Continues on next page

© Copyright 2009-2010 ABB. All rights reserved.

Removing the EIB board

Use this procedure to remove the EIB board.

	Action	Info
1.	**DANGER!** Turn off all electric power, hydraulic and pneumatic pressure supplies to the robot!	
2.	Remove the *base cover*.	See the figure in : • *Location of the Encoder Interface board on page 116*
3.	Remove the attachment screws securing the *plate*.	See the figure in: • *Location of the Encoder Interface board on page 116*
4.	Pull carefully out the cable harnesss main a little in order to reach the EIB board.	
5.	Disconnect the battery cable.	
6.	Remove the *bracket* where the battery is fitted.	See the figure in: • *Location of the Encoder Interface board on page 116*
7.	Disconnect connectors: • R1.ME1-3 • R1.ME4-6 • R2.EIB.	
8.	Remove the *EIB board*.	See the figure in: • *Location of the Encoder Interface board on page 116*

Refitting the EIB board

Use this procedure to refit the EIB board.

	Action	Info
1.	Fit the EIB board.	Tightening torque: 2 Nm. See the figure in: • *Location of the Encoder Interface board on page 116*
2.	Reconnect connectors: • R1.ME1-3 • R1.ME4-6 • R2.EIB.	
3.	Fit the *plate* where the battery is fitted.	See the figure in: • *Location of the Encoder Interface board on page 116*
4.	Reconnect the battery cable.	

© Copyright 2009-2010 ABB. All rights reserved.

Continues on next page

Continued

	Action	Info
5.	Push the cable harness main carefully into the *base*.	**CAUTION!** Arrange the cable harness inside correctly in a way that: • it is not damaged in the continued refitting process • extra wear will not occur after production is restarted, which will shorten the life of the harness. See section: • *Refitting the cable harness on page 107*.
6.	Secure the *plate* with its attachment screws.	Tightening torque: 2 Nm. See the figure in: • *Location of the Encoder Interface board on page 116*
7.	Refit the *base cover*.	Tightening torque: 4 Nm. See the figure in: • *Location of the Encoder Interface board on page 116*
8.	Recalibrate the robot.	See chapter: • *Calibration*.
9.	**DANGER!** Make sure all safety requirements are met when performing the first test run. These are further detailed in the section *DANGER - First test run may cause injury or damage! on page 40*.	

© Copyright 2009-2010 ABB. All rights reserved.

4.4 Plastic covers

4.4.1. Replacing plastic covers

Introduction

The section describes how to replace the plastic covers on the robot.

Location of the plastic covers

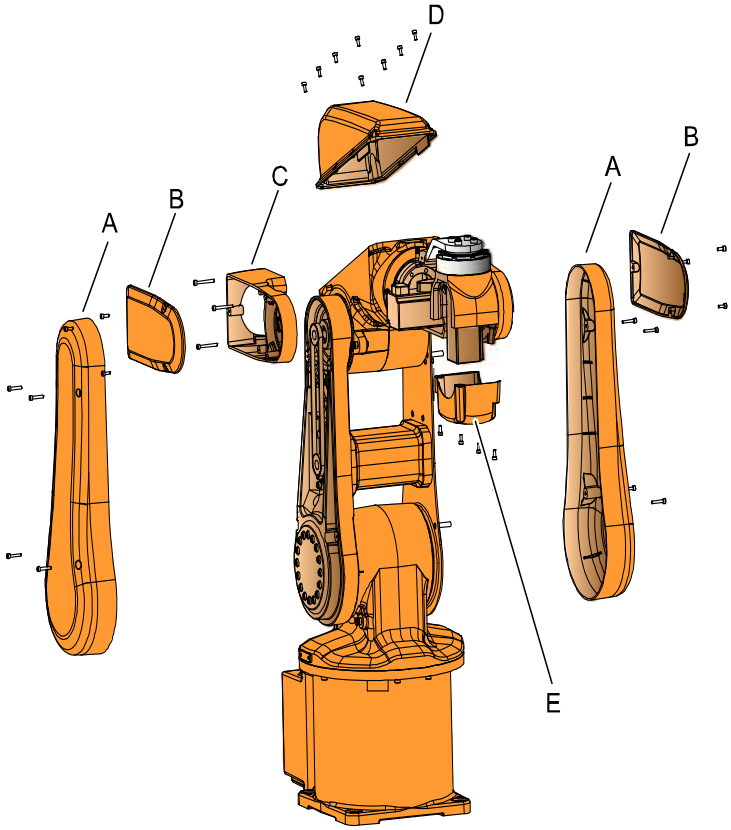

xx0900000607

A	Lower arm cover (2 pcs.)
B	Wrist side cover (2 pcs.)
C	Wrist housing (plastic)
D	Housing cover
E	Tilt cover

© Copyright 2009-2010 ABB. All rights reserved.

Continues on next page

Required equipment

Equipment	Note
Standard tools	The content is defined in the section *Standard toolkit on page 191*.
Other tools and procedures may be required. See references to these procedures in the step-by-step instructions below.	These procedures include references to the tools required.

Attachment screws and tightening torques

The table shows what attachment screws and tightening torques to be used.

Cover	Attachment screw	Screw quality	Qty.	Tightening torque
Lower arm cover	M3x16	Steel 12.9 Black oxide	4+4	1 Nm
Wrist side cover	M3x8	Steel 12.9 Black oxide	3+3	1 Nm
Wrist housing (plastic)	M3x25	Steel 12.9 Black oxide	3	1 Nm
Housing cover	M3x8	Steel 12.9 Black oxide	8	1 Nm
Tilt cover	M3x8	Steel 12.9 Black oxide	4	1 Nm

Removing plastic covers

Use this procedure to remove the plastic covers.

	Action	Info
1.	**DANGER!** Turn off all electric power, hydraulic and pneumatic pressure supplies to the robot!	
2.	Remove the attachment screws securing the plastic cover.	
3.	Remove the plastic cover.	
4.	If the cover shall be reused, keep it clean and put in a safe place.	

© Copyright 2009-2010 ABB. All rights reserved.

Continues on next page

Refitting plastic covers

Use this procedure to refit the plastic covers.

	Action	Info
1.	Before fitting the plastic cover, check it for cracks or any other damage.	If the plastic cover is cracked or has any other damage it must be replaced with a new one.
2.	Fit the plastic cover and secure it with its *attachment screws*. Which attachment screws to use is described in the table: • *Attachment screws and tightening torques on page 120*	
3.	For *tightening torques*, see the table: • *Attachment screws and tightening torques on page 120*	

© Copyright 2009-2010 ABB. All rights reserved.

4.5 Upper arm

4.5.1. Replacing the upper arm

Introduction

This procedure describes how to replace the upper arm.

Location of upper arm

The upper and lower arms are located as shown in the figure.

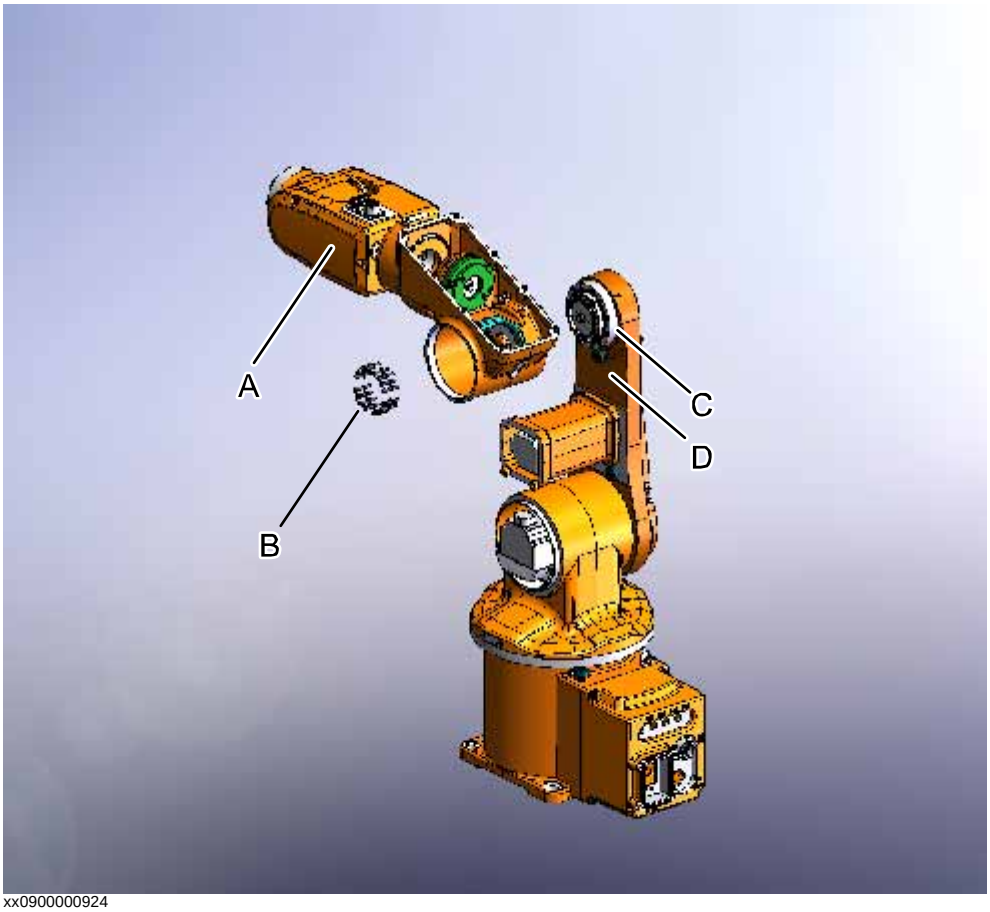

xx0900000924

A	Upper arm, complete with wrist
B	Attachment screws (16 pcs)
C	Gearbox, axis 3
D	Lower arm

© Copyright 2009-2010 ABB. All rights reserved.

Continues on next page

Required equipment

Equipment	Note
Standard toolkit	The content is defined in the section *Standard toolkit on page 191*.
Other tools and procedures may be required. See references to these procedures in the step-by-step instructions below.	These procedures include references to the tools required.
Loctite 7063	For removing residues of Loctite.
Loctite 574	

Removing the upper arm

Use this procedure to remove the upper arm.

	Action	Info
1.	Move axis 5 to a 90° position.	
2.	**DANGER!** Turn off all electric power, hydraulic and pneumatic pressure supplies to the robot!	
3.	Remove the *wrist covers*.	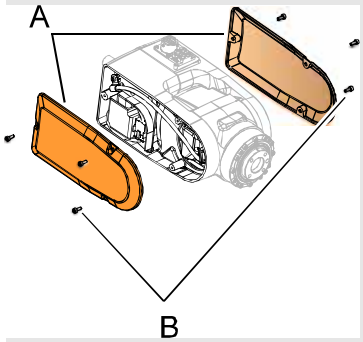 xx0900000999 Parts: • A: Wrist covers (2 pcs) • B: Attachment screws (3+3 pcs)
4.	Remove *motor axis 5*.	See section: • *Replacing motor axis 5 on page 160*
5.	Remove the *cable harness* in the *wrist*.	See section: • *Removing the cable harness on page 96*.
6.	Pull the *cable harness* out of the *wrist housing*.	

© Copyright 2009-2010 ABB. All rights reserved.

Continues on next page

	Action	Info
7.	Remove the *wrist housing (plastic)*.	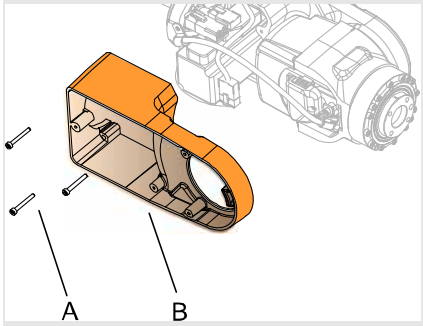 xx0900000900 Parts: • A: Attachment screws (3 pcs) • B: Wrist housing (plastic)
8.	Remove the *cable harness* in the *upper arm housing*.	See section: • *Removing the cable harness in the wrist on page 97*.
9.	Unscrew the attachment screws securing the *cable brackets* on both sides of motor axis 4.	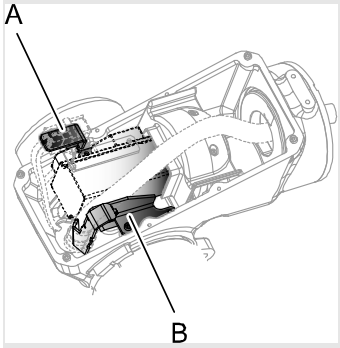 xx1000001023 Parts: • A: Cable bracket • B: Cable bracket
10.	Remove the *lower arm covers* on both sides of the robot.	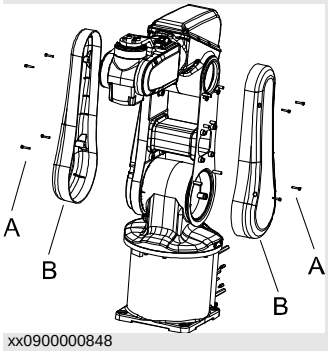 xx0900000848 Parts: • A: Attachment screws (4+4 pcs) • B: Lower arm covers (1+1)
11.	Remove the *cable harness* in the *lower arm*.	See section: • *Removing the cable harness in the wrist on page 97*.

Continues on next page

© Copyright 2009-2010 ABB. All rights reserved.

Continued

	Action	Info
12.	Unscrew the *attachment screws* securing the *lower arm plate* to the *motor cover*.	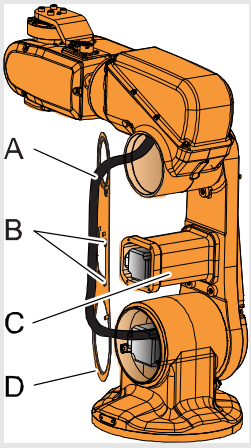 xx0900000851 Parts: • A: Cable harness • B: Holes for attachment screws (4 pcs) • C: Motor cover • D: Lower arm plate
13.	Pull out the cable harness through the upper arm housing.	
14.	Secure the upper arm by holding it firmly.	
15.	Unscrew the *attachment screws* securing the *upper arm with wrist* to *gearbox axis 3*.	See the figure in: • *Location of upper arm on page 122*
16.	Remove the upper arm.	

© Copyright 2009-2010 ABB. All rights reserved.

Continues on next page

Refitting the upper arm

Use this procedure to refit the upper arm.

	Action	Info
1.	Check that: • All assembly surfaces are clean and without damages.	
2.	Remove old residues of Loctite from the assembly surfaces on gearbox axis 3 and upper arm, using *Loctite 7063*.	See: • *Required equipment on page 123*
3.	Apply *Loctite 574* on the assembly surfaces on *gearbox axis 3* and the *upper arm*.	
4.	Secure the *upper arm including wrist* to *gearbox axis 3* with its *attachment screws*.	Tightening torque: 2 Nm. See the figure in: • *Location of upper arm on page 122*
5.	Push the *cable harness* into the *upper arm housing*.	See section: • *Refitting the cable harness on page 107*
6.	Refit the *lower arm plate*.	Tightening torque: 4 Nm. 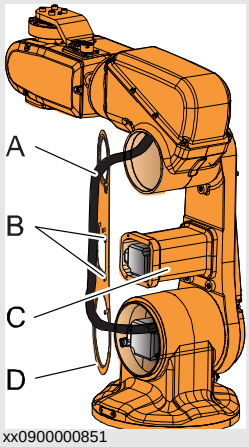 xx0900000851 Parts: • A: Cable harness • B: Holes for attachment screws (4 pcs) • C: Motor cover • D: Lower arm plate
7.	Secure the *cable harness* to the *lower arm plate*.	See section: • *Refitting the cable harness on page 107*

© Copyright 2009-2010 ABB. All rights reserved.

Continues on next page

Continued

	Action	Info
8.	Refit the *lower arm covers*.	Tightening torque: 1 Nm. 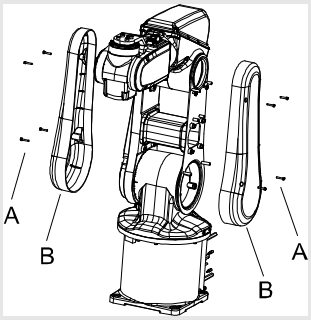 xx0900000848 Parts: • A: Attachment screws (4+4 pcs) • B: Lower arm covers (1+1)
9.	Secure the *cable harness* in the *upper arm housing*.	See section: • *Refitting the cable harness on page 107*
10.	Refit the two *cable brackets* on either side of motor axis 4.	Tightening torque: 1 Nm. 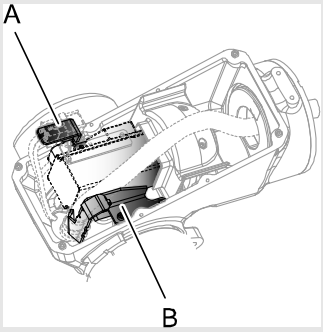 xx1000001023 Parts: • A: Cable bracket • B: Cable bracket
11.	Push the cable harness into the wrist.	
12.	Refit the *cable bracket*.	Tightening torque: 1 Nm. 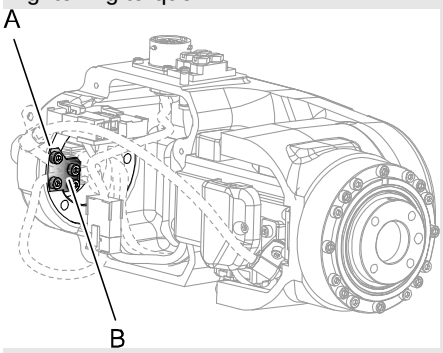 xx0900001018 Parts: • A: Attachment screws (4 pcs) • B: Cable bracket

Continues on next page

© Copyright 2009-2010 ABB. All rights reserved.

4.5.1. Replacing the upper arm

Continued

	Action	Info
13.	Refit the *cable harness* in the *wrist*.	See section: • *Refitting the cable harness on page 107*
14.	Refit the *wrist housing (plastic)*.	Tightening torque: 1 Nm. 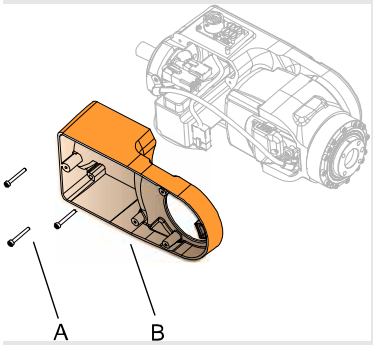 xx0900000900 Parts: • Attachment screws (3 pcs) • B: Wrist housing (plastic)
15.	Refit *motor axis 5*.	See section: • *Replacing motor axis 5 on page 160*
16.	Recalibrate the robot.	See chapter: • *Calibration.*
17.	**DANGER!** Make sure all safety requirements are met when performing the first test run. These are further detailed in the section *DANGER - First test run may cause injury or damage! on page 40*.	

© Copyright 2009-2010 ABB. All rights reserved.

4.6 Lower arm

4.6.1. Replacing the lower arm

Introduction

This procedure describes how to replace the lower arm.

Gearbox axis 3 is included in the lower arm.

Location of the lower arm

The lower arm is located as shown in the figure.

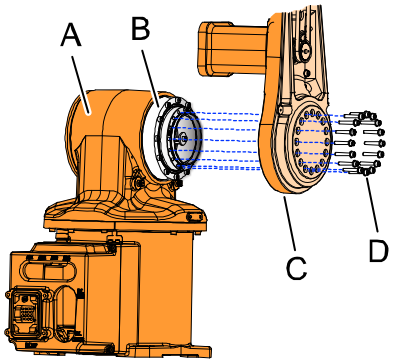

xx0900000859

A	Swing housing
B	Gearbox axis 2
C	Lower arm
D	Attachment screws (16 pcs)

Required equipment

Equipment	Note
Standard toolkit	The content is defined in the section *Standard toolkit on page 191*.
Other tools and procedures may be required. See references to these procedures in the step-by-step instructions below.	These procedures include references to the tools required.
Loctite 7063	For removing residues of Loctite.
Loctite 574	

© Copyright 2009-2010 ABB. All rights reserved.

Continues on next page

Removing the lower arm

Use this procedure to remove the lower arm.

	Action	Info
1.	**DANGER!** Turn off all electric power, hydraulic and pneumatic pressure supplies to the robot!	
2.	Remove the *lower arm covers* on both sides of the robot.	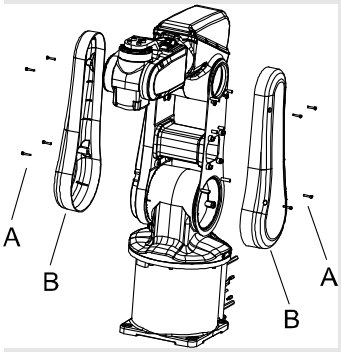 xx0900000848 Parts: • A: Attachment screws (4+4 pcs) • B: Lower arm covers (1+1)
3.	Remove the *cable harness* in the *lower arm*.	See section: • *Removing the cable harness in the wrist on page 97*
4.	Unscrew the attachment screws securing the lower and upper arms and separate the two.	
5.	Unscrew the attachment screws securing the motor cover to the lower arm plate.	
6.	Unscrew the *attachment screws* securing the *lower arm* to *gearbox axis 2*.	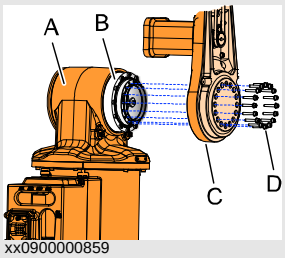 xx0900000859 Parts: • A: Swing housing • B: Gearbox axis 2 • C: Lower arm • D: Attachment screws (16 pcs)
7.	Remove the *lower arm*.	
8.	Remove *motor axis 3* and *timing belt*.	See section: • *Replacing motor axis 3 on page 152*

Continues on next page

© Copyright 2009-2010 ABB. All rights reserved.

Refitting the lower arm

Use this procedure to refit the lower arm.

	Action	Info
1.	Check that: • all assembly surfaces are clean and without damages.	
2.	Remove old residues of Loctite from the assembly surfaces on gearbox axis 2 and lower arm, using *Loctite 7063.*.	See: • *Required equipment on page 129*
3.	Apply Loctite 574 on the assembly surfaces on gearbox axis 2 and lower arm.	
4.	Refit the *lower arm* to *gearbox axis 2* with its *attachment screws*.	Tightening torque: 4 Nm. 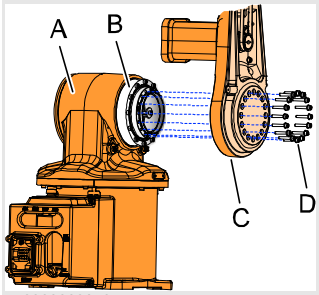 xx0900000859 Parts: • A: Swing housing • B: Gearbox axis 2 • C: Lower arm • D: Attachment screws (16 pcs)
5.	Refit the *motor cover*.	Tightening torque: 4 Nm.
6.	Refit *motor axis 3*.	See section: • *Replacing motor axis 3 on page 152*
7.	Secure the *upper* and *lower arms* with the attachment screws (16 pcs).	Tightening torque: 2 Nm.
8.	Refit the *cable harness* in the *lower arm*.	See section: • *Refitting the cable harness on page 107*

© Copyright 2009-2010 ABB. All rights reserved.

Continues on next page

4.6.1. Replacing the lower arm

Continued

	Action	Info
9.	Refit the *lower arm covers*.	Tightening torque: 1 Nm. 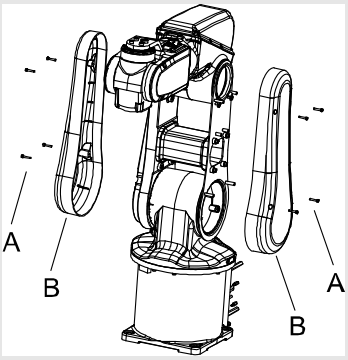 xx0900000848 Parts: • A: Attachment screws (4+4 pcs) • B: Lower arm cover
10.	Recalibrate the robot.	See chapter: • *Calibration*.
11.	**DANGER!** Make sure all safety requirements are met when performing the first test run. These are further detailed in the section *DANGER - First test run may cause injury or damage! on page 40*.	

© Copyright 2009-2010 ABB. All rights reserved.

4.7 Motors and motors with gearboxes

4.7.1. Replacing motor axis 1 with gearbox

Introduction

This procedure describes how to replace:

- motor axis 1 with gearbox.

Gearbox axis 1 is a part of motor axis 1 when ordered as a spare part. The procedure below describes the replacement of motor and gearbox axis 1 as one unit. For further information, please **contact ABB**.

Location of motor axis 1 with gearbox

The motor axis 1 with gearbox is located as shown in the figure.

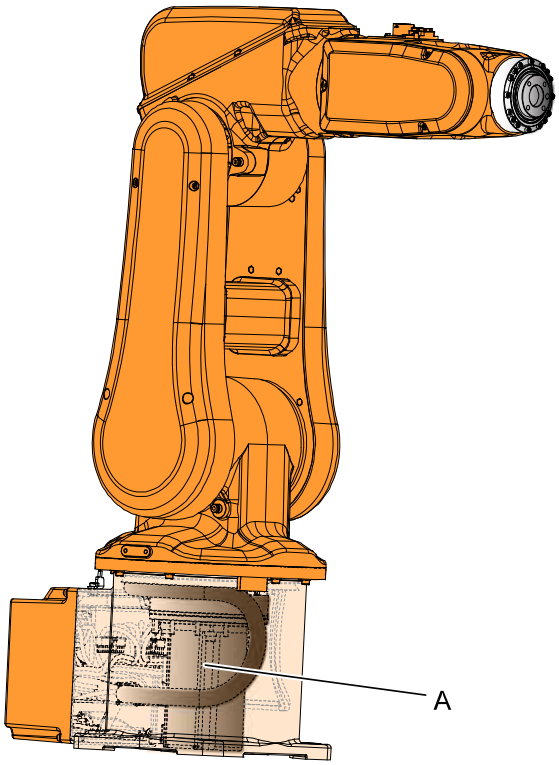

xx0900000871

A	Motor axis 1 with gearbox

Required equipment

Equipment	Note
Standard toolkit	The content is defined in the section *Standard toolkit on page 191*.
Other tools and procedures may be required. See references to these procedures in the step-by-step instructions below.	These procedures include references to the tools required.
Loctite 574	Amount 2 ml
Loctite 7063	For removing residues of Loctite

Continues on next page

© Copyright 2009-2010 ABB. All rights reserved.

Removing motor axis 1 with gearbox

Use this procedure to remove motor axis 1 with gearbox.

	Action	Info
1.	**NOTE!** If the robot is fitted in a suspended postion it must first be dismounted from this position. The replacing procedure of motor axis 1 must be performed with the robot in an upright position.	
2.	**DANGER!** Turn off all electric power, hydraulic and pneumatic pressure supplies to the robot!	
3.	Remove the *cable harness* between axes 6 and 2.	See section: • *Removing the cable harness on page 96*
4.	Pull out the cable harness between axes 6 and 2 through the *swing housing*.	
5.	Release the brakes.	See section: • *Manually releasing the brakes on page 55*
6.	Unscrew the *attachment screws* securing the *swing housing* to the *swing plate* and remove it together with the lower and upper arms.	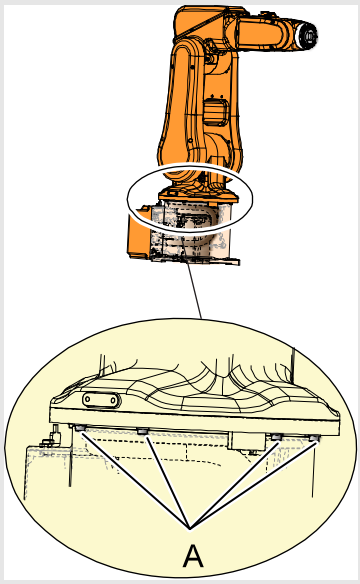 xx0900001053 Parts: • A: Attachment screws (8 pcs)

© Copyright 2009-2010 ABB. All rights reserved.

Continues on next page

	Action	Info
7.	Cut the *cable straps* securing the cable harness to the *swing plate*.	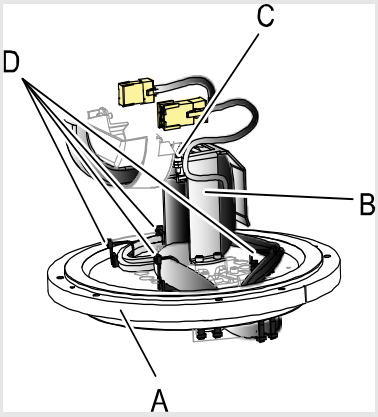 xx0900000884 Parts: • A: Swing plate • B: Cable holder • C: Attachment screws (2 pcs) • D: Cable straps (4 pcs)
8.	Remove the *attachment screws* securing the cable harness to the *cable holder*.	
9.	Remove the *swing plate*.	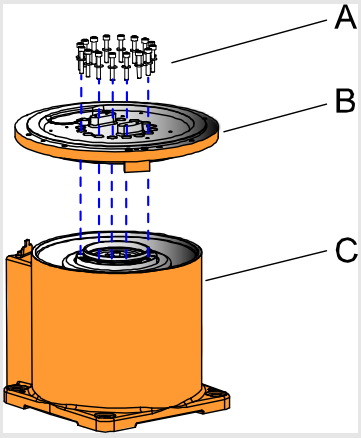 xx0900000799 Parts: • A: Attachment screws and washers (16+16 pcs) • B: Swing plate • C: Base

© Copyright 2009-2010 ABB. All rights reserved.

Continues on next page

4.7.1. Replacing motor axis 1 with gearbox

Continued

	Action	Info
10.	Remove the *cable guide*.	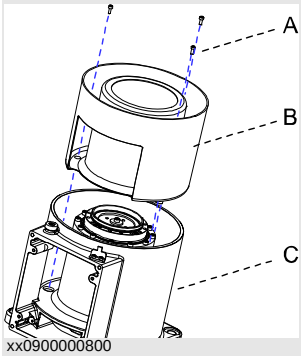 xx0900000800 Parts: • A: Attachment screws (3 pcs) • B: Cable guide • C: Base
11.	Remove the *base cover*.	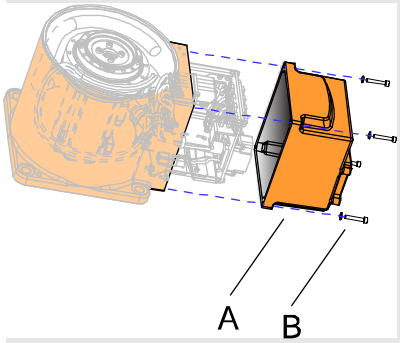 xx0900000829 Parts: • A: Base cover • B: Attachment screws (4 pcs)
12.	Remove the *attachment screws* securing the *plate*.	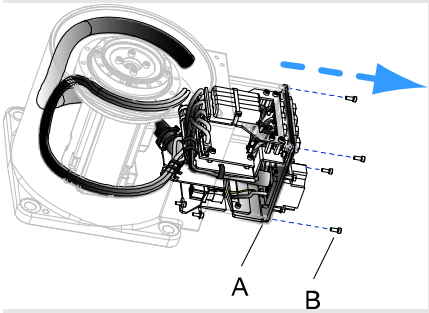 xx0900000831 Parts: • A: Plate • B: Attachment screws (4 pcs)
13.	Carefully pull the *cable harness main* out a little.	This is done in order to reach the connectors for motor axis 1.
14.	Disconnect connectors: • R2.MP1 • R2.ME1.	

Continues on next page

© Copyright 2009-2010 ABB. All rights reserved.

	Action	Info
15.	Remove the *attachment screws* securing the *gearbox* to the support.	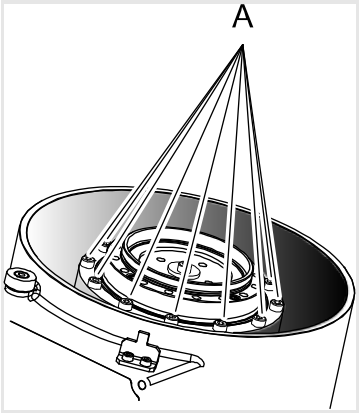 xx0900001054 Parts: • A: Attachment screws (12 pcs)
16.	Remove the *motor axis 1 with gearbox* carefully. **CAUTION!** Lift motor and gearbox by holding the *support* in order not to damage any parts.	

© Copyright 2009-2010 ABB. All rights reserved.

Continues on next page

Refitting motor and gearbox axis 1

Use this procedure to refit both motor and gearbox axis 1.

	Action	Info
1.	Check that: • all assembly surfaces are clean and without damages • motor and gearbox are clean and without damages.	
2.	Remove the two *bolts with nuts* securing motor axis 1 with gearbox while being transported.	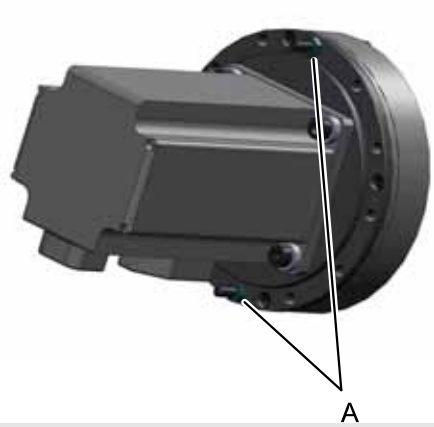 xx0900001050 Parts: • A: Bolt with nut, used during transport (2 pcs)
3.	Secure motor axis 1 with gearbox to the base casting with its *attachment screws*.	Tightening torque: 4 Nm. 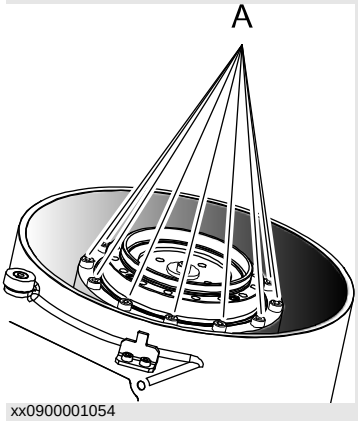 xx0900001054 Parts: • A: Attachment screws (12 pcs)

© Copyright 2009-2010 ABB. All rights reserved.

Continues on next page

	Action	Info
4.	Fit the *cable guide*.	Tightening torque: 2 Nm. 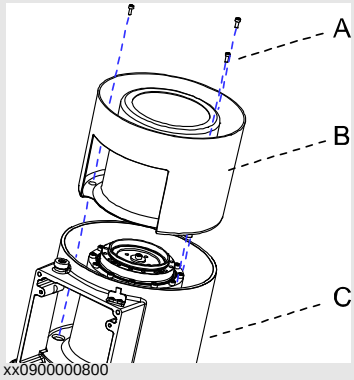 xx0900000800 Parts: • A: Attachment screws (3 pcs) • B: Cable guide • C: Base
5.	Reconnect connectors: • R2.MP1 • R2.ME1.	
6.	**DANGER!** Check that the cable harness is intact and connected correctly on all axes!	
7.	Refit the cable harness by carefully pushing it back into the base. **CAUTION!** Arrange the cable harness inside in a way that it will not be damaged.	See section: • *Refitting the cable harness on page 107* 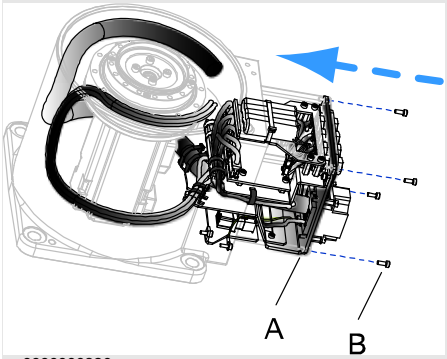 xx0900000836 Parts: • A: Plate • B: Attachment screws (4 pcs)
8.	Secure the *plate* of the cable harness with its *attachment screws*.	Tightening torque: 2 Nm.

Continues on next page

© Copyright 2009-2010 ABB. All rights reserved.

Continued

	Action	Info
9.	Fit the *base cover*.	Tightening torque: 4 Nm. 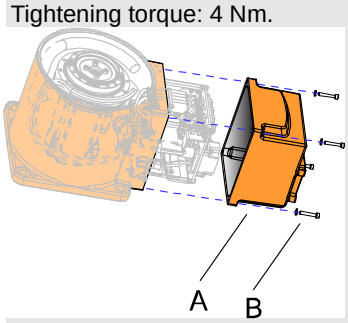 xx0900000829 Parts: • A: Base cover • B: Attachment screws (4 pcs)
10.	Clean the *assembly surface* on the *swing plate* from old residues of Loctite.	See: • *Required equipment on page 133* 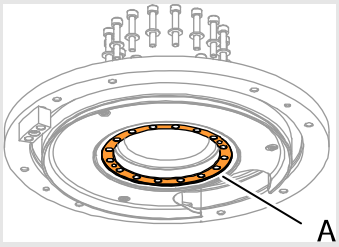 xx0900000835 Parts: • A: Surface where Loctite 574 shall be applied on swing plate
11.	Apply Loctite 574 on the assembly surfaces on swing plate and gear.	
12.	Fit the *swing plate*.	Tightening torque: 1 Nm. 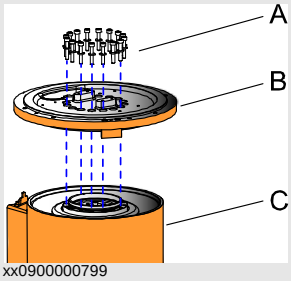 xx0900000799 Parts: • A: Attachment screws and washers (16+16 pcs) • B: Swing plate • C: Base
13.	Push the cable harness through the swing housing to motor axis 2.	

© Copyright 2009-2010 ABB. All rights reserved.

Continues on next page

	Action	Info
14.	Fit the cable harness to the *cable holder*.	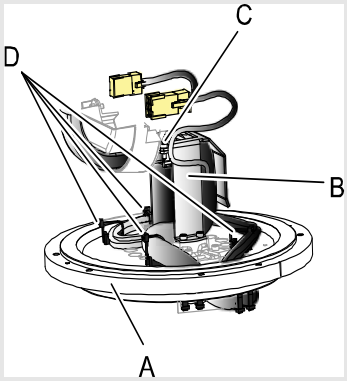 xx0900000884 Parts: • A: Swing plate • B: Cable holder • C: Attachment screws (2 pcs) • D: Cable straps (4 pcs)
15.	Secure the cable harness with the *cable straps*.	
16.	Release the brakes.	See section: • *Manually releasing the brakes on page 55*
17.	Fit the *swing housing* with *lower* and *upper arms* with its *attachment screws*.	Tightening torque: 4 Nm. 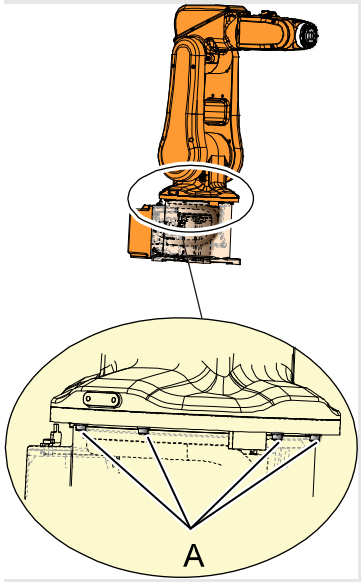 xx0900001053 Parts: • A: Attachment screws (8 pcs)
18.	Refit the *cable harness* from axis 2 to axis 6.	See section: • *Refitting the cable harness on page 107*
19.	Recalibrate the robot.	See chapter: • *Calibration.*

Continues on next page

© Copyright 2009-2010 ABB. All rights reserved.

4.7.1. Replacing motor axis 1 with gearbox

Continued

	Action	Info
20.	**DANGER!** Make sure all safety requirements are met when performing the first test run. These are further detailed in the section *DANGER - First test run may cause injury or damage! on page 40*.	

© Copyright 2009-2010 ABB. All rights reserved.

4.7.2. Replacing motor axis 2, with gearbox

Introduction

This procedure describes how to replace:

- motor axis 2 with gearbox.

Gearbox axis 2 is a part of motor axis 2 when ordered as a spare part. The procedure below describes the replacement of motor and gearbox axis 2 as one unit. For information how to replace gearbox axis 2, please **contact ABB**.

Location of motor axis 2 with gearbox

Motor axis 2 with gearbox is located as shown in the figure.

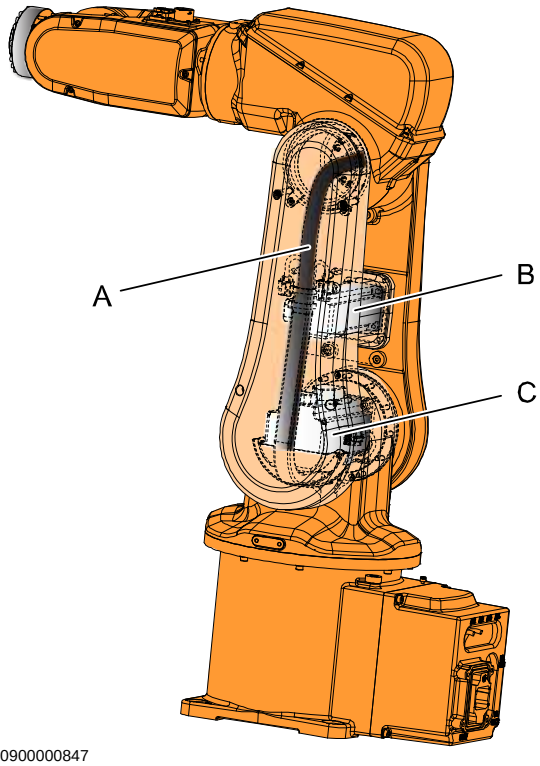

xx0900000847

A	Cable harness
B	Motor axis 3
C	Motor axis 2 with gearbox

Required equipment

Equipment	Note
Standard toolkit	The content is defined in the section *Standard toolkit on page 191*.
Other tools and procedures may be required. See references to these procedures in the step-by-step instructions below.	These procedures include references to the tools required.
Loctite 7063	For removing residues of Loctite.
Loctite 574	Amount: 2 ml.

Continues on next page

© Copyright 2009-2010 ABB. All rights reserved.

Removing motor axis 2 with gearbox

Use this procedure to remove motor axis 2 with gearbox.

	Action	Info
1.	**DANGER!** Turn off all electric power, hydraulic and pneumatic pressure supplies to the robot!	
2.	Remove the *lower arm covers* on both sides of the lower arm	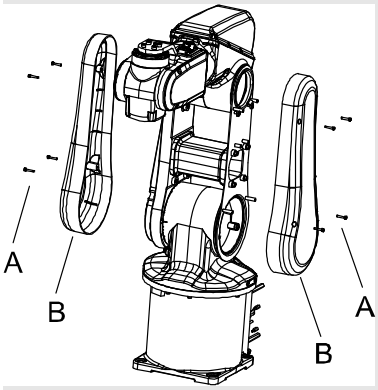 xx0900000848 Parts: • A: Attachment screws (4+4 pcs) • B: Lower arm covers (1+1)
3.	Cut the *cable straps* securing the *connectors*.	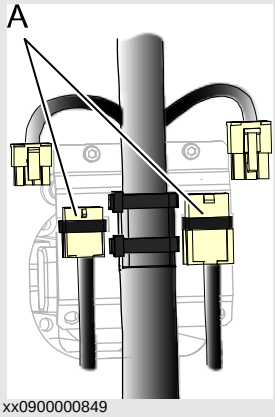 xx0900000849 Parts: • A: Cable straps (2 pcs)

© Copyright 2009-2010 ABB. All rights reserved.

Continues on next page

Continued

	Action	Info
4.	Disconnect connectors: • R2.MP3 • R2.ME3	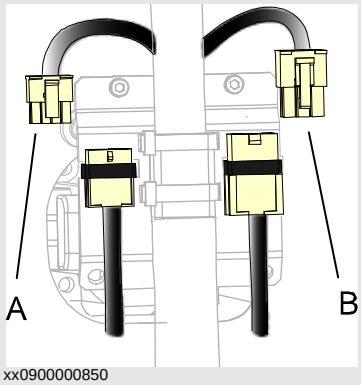 xx0900000850 Connectors: • A: R2.ME3 • B: R2.MP3
5.	Unscrew the *attachment screws* securing the *cable bracket*.	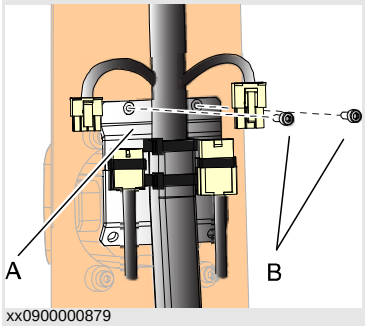 xx0900000879 Parts: • A: Cable bracket • B: Attachment screws (2 pcs)
6.	Remove both *cable guides*.	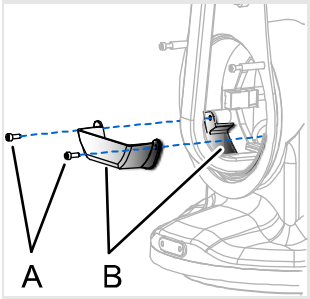 xx0900000857 Parts: • A: Attachment screws (2+2 pcs) • B: Cable guides (2 pcs)

© Copyright 2009-2010 ABB. All rights reserved.

Continues on next page

Continued

	Action	Info
7.	Unscrew the *attachment screws* securing the *lower arm plate* to the *motor cover*.	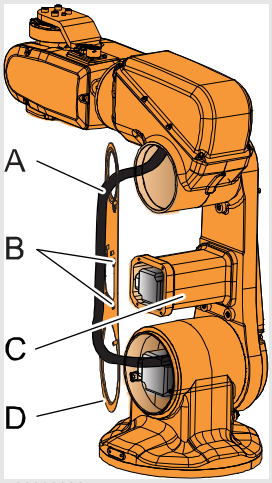 xx0900000851 Parts: • A: Cable harness • B: Holes for attachment screws (4 pcs) • C: Motor cover • D: Lower arm plate
8.	Unscrew the *attachment screws* securing the *lower arm* to *gearbox axis 2*.	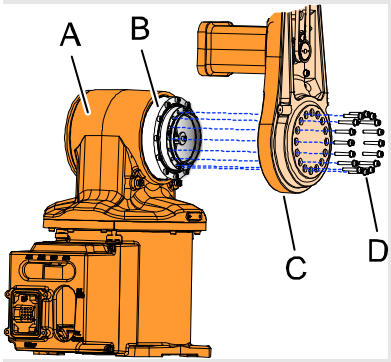 xx0900000859 Parts: • A: Swing housing • B: Gearbox axis 2 • C: Lower arm • D: Attachment screws (16 pcs)
9.	Separate *lower arm* and *swing housing*.	
10.	Disconnect connectors: • R2.MP2 • R2.ME2	

© Copyright 2009-2010 ABB. All rights reserved.

Continues on next page

	Action	Info
11.	Remove *gearbox axis 2* together with the *motor*. **CAUTION!** In order not to damage any parts, hold the two items with a firm grip on the support when removing them.	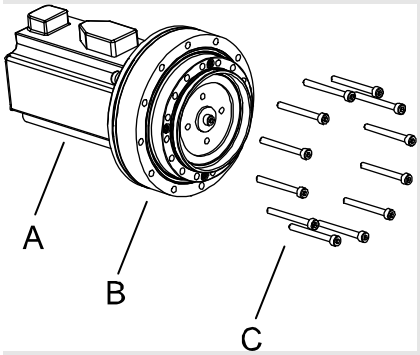 xx0900000869 Parts: • A: Motor axis 2 • B: Gearbox axis 1 • C: Attachment screws (12 pcs)

© Copyright 2009-2010 ABB. All rights reserved.

Continues on next page

Refitting motor axis 2 with gearbox

Use this procedure to refit motor axis 2 with gearbox.

	Action	Info
1.	Before refitting, check that: • all assembly surfaces are clean and without damages • motor and gearbox are clean and without damages.	
2.	Reconnect connectors: • R2.MP2 • R2.ME2	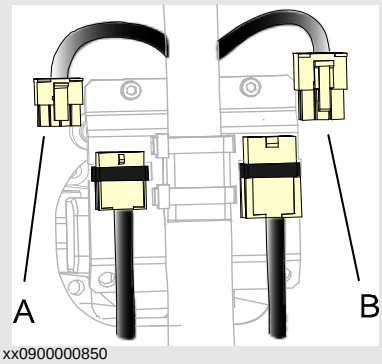 xx0900000850 Connectors: • A: R2.ME2 • B: R2.MP2
3.	Secure the connectors with *cable straps*. **NOTE!** Put the strap tie on the side in order to make the lower arm cover fit well.	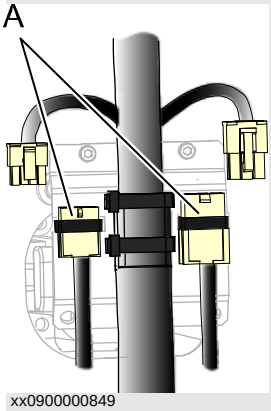 xx0900000849 Parts: • A: Cable straps (2 pcs)

© Copyright 2009-2010 ABB. All rights reserved.

Continues on next page

	Action	Info
4.	Remove the two bolts with nuts securing motor axis 2 with gearbox while being transported.	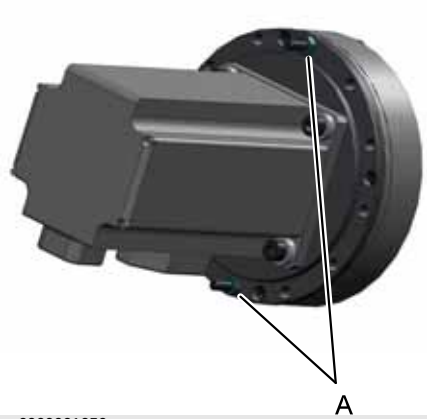 xx0900001050 Parts: • A: Bolt with nut, used during transport (2 pcs)
5.	Remove old residues of Loctite from the assembly surfaces on the lower arm.	See: • *Required equipment on page 143*
6.	Apply *Loctite 574* on the assembly surfaces of the lower arm and gearbox.	
7.	Place motor axis 2 with gearbox in the swing housing. **CAUTION!** In order not to damage any parts, hold the two items with a firm grip on the support when removing them.	
8.	Reconnect connectors: • R2.MP3 • R2.ME3.	
9.	**DANGER!** Check that the cable harness is intact and connected correctly on all axes!	

© Copyright 2009-2010 ABB. All rights reserved.

Continues on next page

Continued

	Action	Info
10.	Refit the *lower arm* to the *swing housing*. with its *attachment screws* and *washers*.	Tightening torque: 4 Nm. 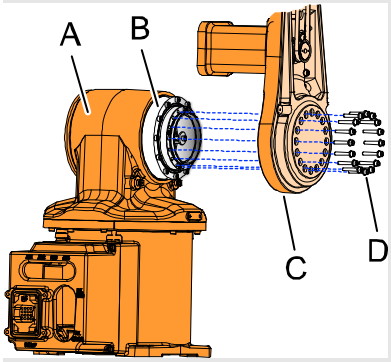 xx0900000859 Parts: • A: Swing housing • B: Gearbox axis 2 • C: Lower arm • D: Attachment screws with washers (12+12 pcs)
11.	Refit the *lower arm plate*.	Tightening torque: 4 Nm. 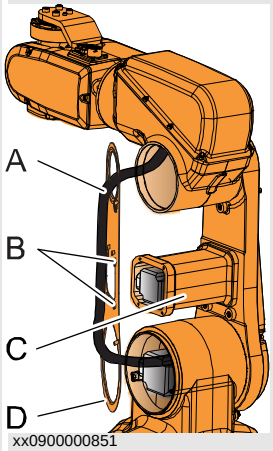 xx0900000851 Parts: • A: Cable harness • B: Holes for attachment screws (4 pcs) • C: Motor cover • D: Lower arm plate

© Copyright 2009-2010 ABB. All rights reserved.

Continues on next page

	Action	Info
12.	Refit the two *cable guides*.	Tightening torque : 1 Nm. 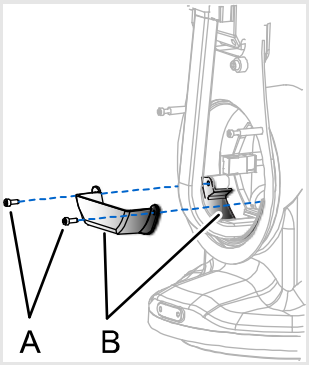 xx0900000857 Parts: • A: Cable guides (2 pcs)
13.	Refit the *lower arm covers*.	Tightening torque: 2 Nm. 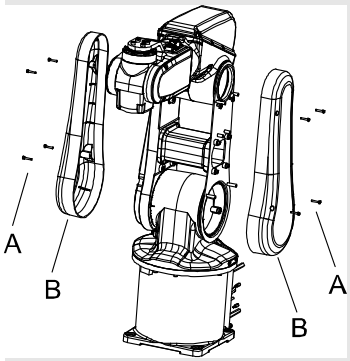 xx0900000848 Parts: • A: Attachment screws (4+4 pcs) • B: Lower arm covers (1+1)
14.	Recalibrate the robot.	See chapter: • *Calibration.*
15.	**DANGER!** Make sure all safety requirements are met when performing the first test run. These are further detailed in the section *DANGER - First test run may cause injury or damage! on page 40*.	

© Copyright 2009-2010 ABB. All rights reserved.

4.7.3. Replacing motor axis 3

Introduction

This procedure describes how to replace motor axis 3.

How to replace gearbox axis 3 see section:

- *Replacing gearbox axis 3 on page 169*

Location of motor axis 3

The motor axis 3 is located as shown in the figure.

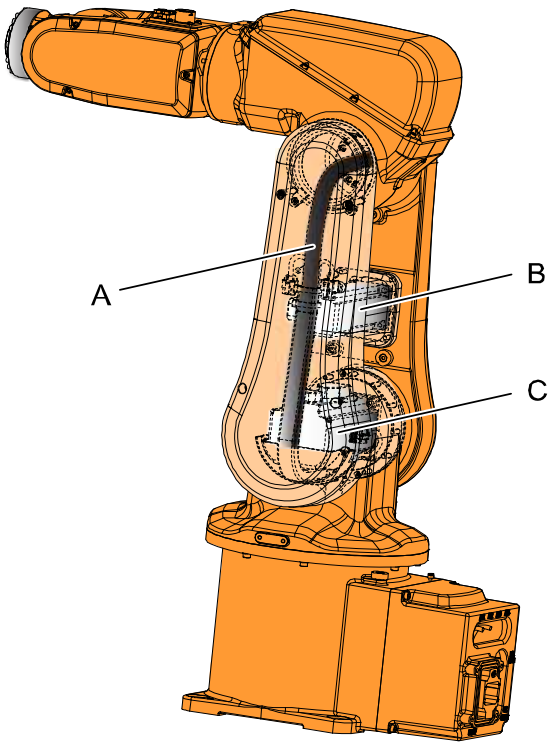

xx0900000847

A	Cable harness
B	Motor axis 3
C	Motor axis 2

Required equipment

Equipment	Note
Standard toolkit	The content is defined in the section *Standard toolkit on page 191*.
Other tools and procedures may be required. See references to these procedures in the step-by-step instructions below.	These procedures include references to the tools required.
Loctite 574	Amount: 2 ml.

Continues on next page

© Copyright 2009-2010 ABB. All rights reserved.

Removing motor axis 3

Use this procedure to replace motor axis 3.

	Action	Info
1.	Secure the arm system before removing motor axis 3.	
2.	**DANGER!** Turn off all electric power, hydraulic and pneumatic pressure supplies to the robot!	
3.	Remove the *lower arm covers* on both sides of the of the lower arm.	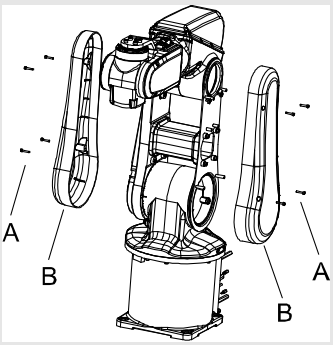 xx0900000848 Parts: • A: Attachment screws (4+4 pcs) • B: Lower arm covers (1+1)
4.	Cut the *cable straps* securing the connectors.	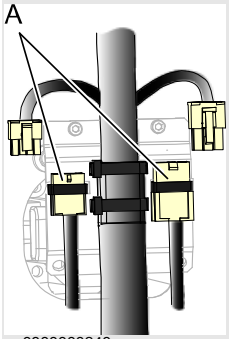 xx0900000849 Parts: • A: Cable straps (2 pcs)

© Copyright 2009-2010 ABB. All rights reserved.

Continues on next page

Continued

	Action	Info
5.	Disconnect connectors: • R2.MP3 • R2.ME3.	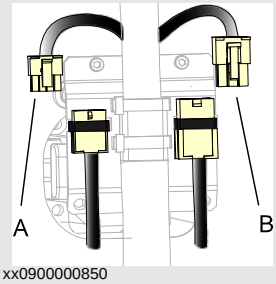 xx0900000850 Parts: • A: R2.ME3 • B: R2.MP3
6.	Unscrew the *attachment screws* securing the *cable bracket*.	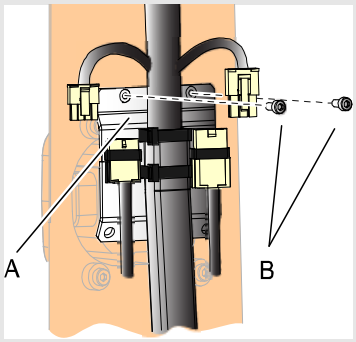 xx0900000879 Parts: • A: Cable bracket • B: Attachment screws (2 pcs)
7.	Unscrew the attachment screws securing the *lower arm plate* to the *motor cover*.	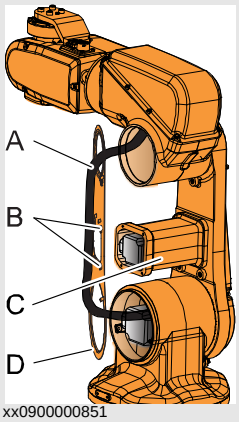 xx0900000851 Parts: • A: Cable harness • B: Holes for attachment screws (4 pcs) • C: Motor cover • D: Lower arm plate
8.	Move the *cable harness* and the *lower arm plate* a little to the side.	

Continues on next page

© Copyright 2009-2010 ABB. All rights reserved.

	Action	Info
9.	Unscrew the *attachment screws* securing the *motor axis 3*.	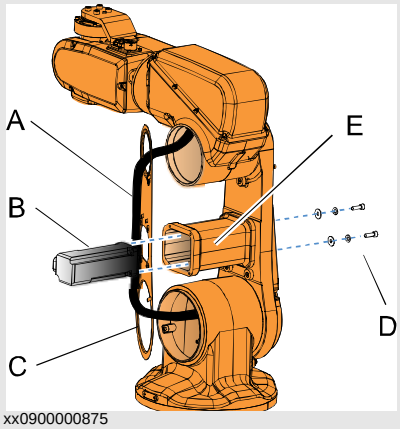 xx0900000875 Parts: • A: Cable harness • B: Motor axis 3 • C: Lower arm side support • D: Attachment screws (2 pcs) • E: Motor cover
10.	Remove the *timing belt* from the *pulleys* on the motor axis.	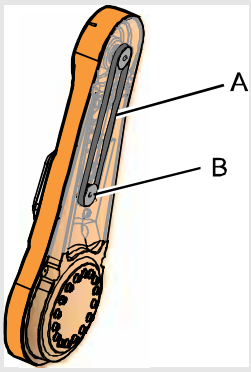 xx0900000876 Parts: • A: Timing belt • B: Pulleys (2 pcs)
11.	Remove the motor.	

© Copyright 2009-2010 ABB. All rights reserved.

Continues on next page

Refitting motor axis 3.

Use this procedure to refit motor axis 3.

	Action	Info
1.	Check that: • all assembly surfaces are clean and without damages • motor and gearbox are clean and undamaged.	
2.	Place the *motor axis 3* in the *motor cover*.	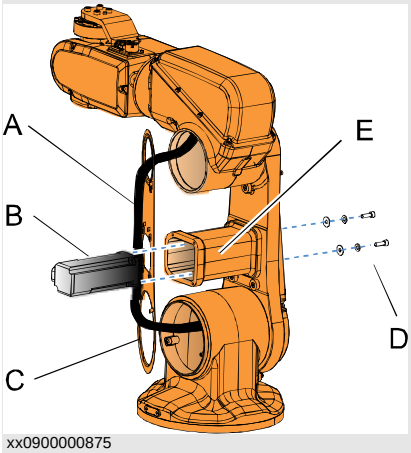 xx0900000875 Parts: • A: Cable harness • B: Motor axis 3 • C: Lower arm plate • D: Attachment screws (2 pcs) • E: Motor cover
3.	Refit the *timing belt* on the *pulleys*.	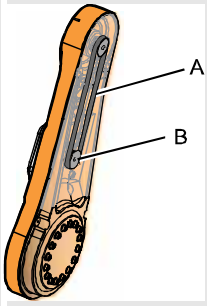 xx0900000876 Parts: • A: Timing belt • B: Pulleys (2 pcs)
4.	Tighten the *attachment screws* and *washers* securing the motor, just enough to still be able to move the motor.	

© Copyright 2009-2010 ABB. All rights reserved.

Continues on next page

	Action	Info
5.	Move the motor to a position where a good *timing belt tension* is reached.	Timing belt tension: F=18-19.8N. **NOTE!** Do not strech the timing belt too much!
6.	Secure the *motor axis 3* with its *attachment screws* and *washers*.	Tightening torque: 5.5 Nm.
7.	Refit the *lower arm plate*.	Tightening torque: 4 Nm. 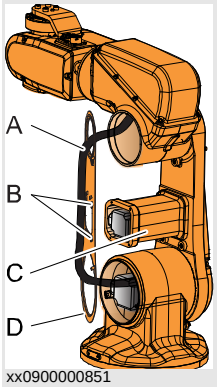 xx0900000851 Parts: • A: Cable harness • B: Holes for attachment screws (4 pcs) • C: Motor cover • D: Lower arm plate
8.	Reconnect connectors: • R2.MP3 • R2.ME3.	
9.	Secure the cable harness by refitting the *cable bracket* to the lower arm plate.	Tightening torque: 1 Nm. 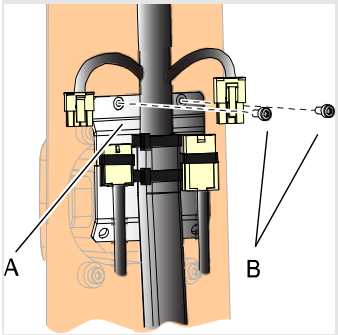 xx0900000879 Parts: • A: Cable bracket • B: Attachment screws (2 pcs)

© Copyright 2009-2010 ABB. All rights reserved.

Continues on next page

	Action	Info
10.	Secure the connectors with *cable straps*. **NOTE!** Put the strap tie on the side in order to make the lower arm cover fit well.	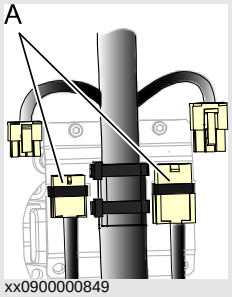 xx0900000849 Parts: • A: Cable straps (2 pcs)
11.	Refit the *lower arm covers*.	Tightening torque: 1 Nm. 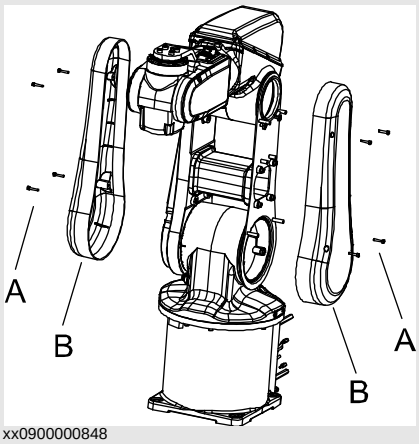 xx0900000848 Parts: • A: Attachment screws (4+4 pcs) • B: Lower arm covers (1+1)
12.	Recalibrate the robot.	See chapter: • *Calibration.*
13.	**DANGER!** Make sure all safety requirements are met when performing the first test run. These are further detailed in the section *DANGER - First test run may cause injury or damage! on page 40*.	

© Copyright 2009-2010 ABB. All rights reserved.

4.7.4. Replacing motor axis 4, with gearbox

Introduction

Motor axis 4 is delivered as part of the upper arm when ordered as a spare part.

How to replace the complete upper arm is described in section:

- *Replacing the upper arm on page 122*

Location of motor axis 4, with gearbox

Motor axis 4, with gearbox is located as shown in the figure:

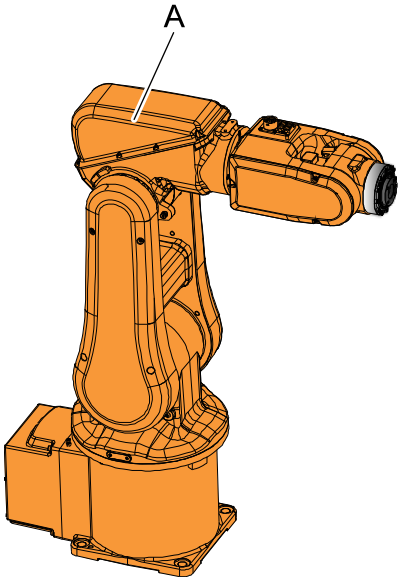

xx0900000785

A	Motor axis 4, with gearbox (below the housing cover)

© Copyright 2009-2010 ABB. All rights reserved.

4.7.5. Replacing motor axis 5

Introduction

This procedure describes how to replace:

- motor axis 5 with pulley.

Location of motor axis 5

The motor axis 5 is located as shown in the figure.

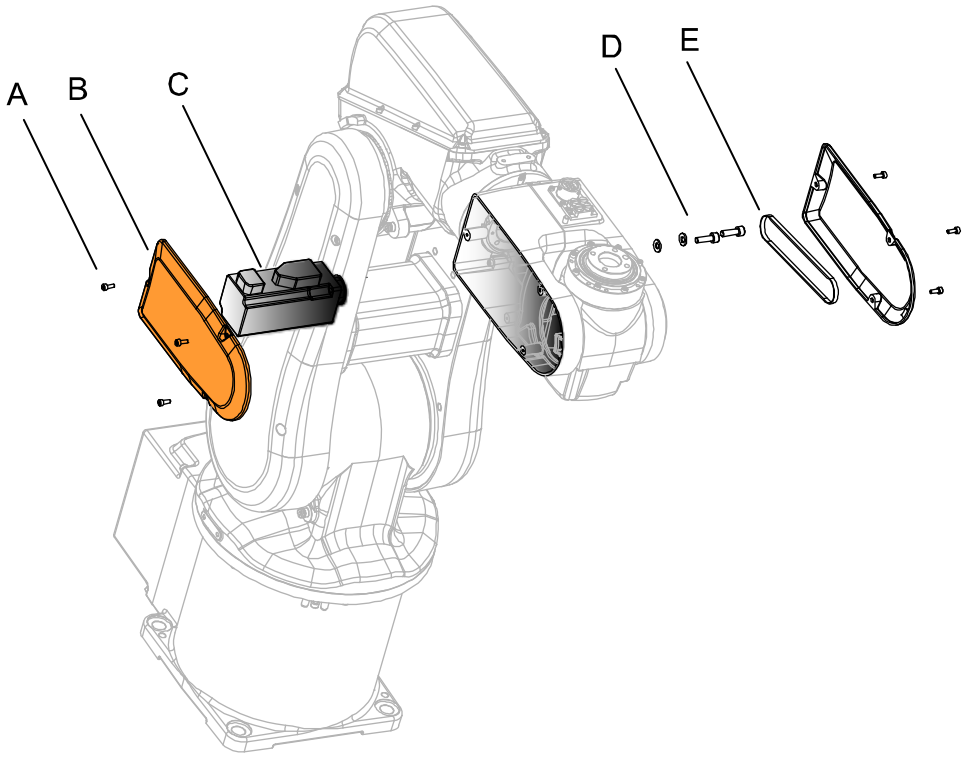

xx0900000890

A	Attachment screws, wrist side covers (3+3 pcs)
B	Wrist side cover
C	Motor axis 5 with pulley
D	Attachment screws and washers, motor axis 5 (2+2 pcs)
E	Timing belt

Required equipment

Equipment	Note
Standard toolkit	The content is defined in the section *Standard toolkit on page 191*.
Other tools and procedures may be required. See references to these procedures in the step-by-step instructions below.	These procedures include references to the tools required.

Continues on next page

© Copyright 2009-2010 ABB. All rights reserved.

Removing motor axis 5 with pulley

Use this procedure to remove motor axis 5 with pulley.

	Action	Info
1.	**DANGER!** Turn off all electric power, hydraulic and pneumatic pressure supplies to the robot!	
2.	Remove the *wrist side covers* on both sides of the wrist.	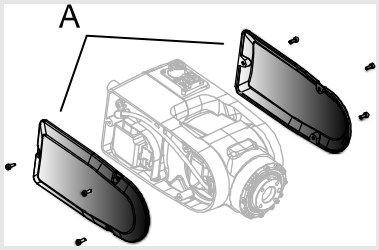 xx0900000886 Parts: • A: Wrist side covers (2 pcs)
3.	Loosen the *attachment screw* securing the *clamp*.	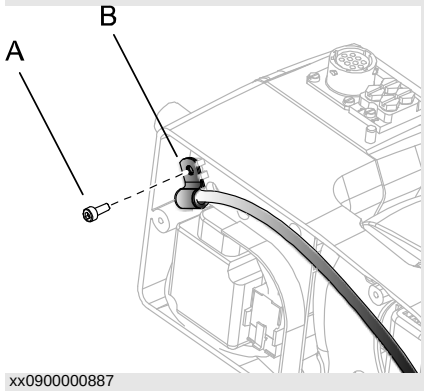 xx0900000887 Parts: • A: Attachment screw • B: Clamp

© Copyright 2009-2010 ABB. All rights reserved.

Continues on next page

Continued

	Action	Info
4.	Remove the *connector support*.	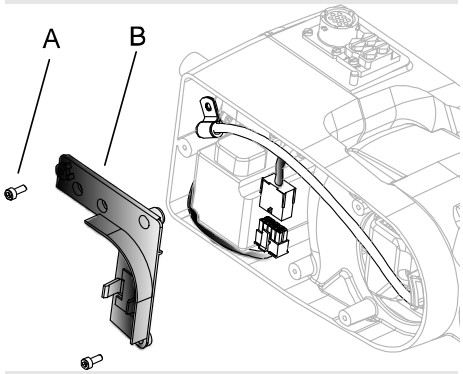 xx0900000888 Parts: • A: Attachment screws (2 pcs) • B: Connector support
5.	Cut the *cable straps*.	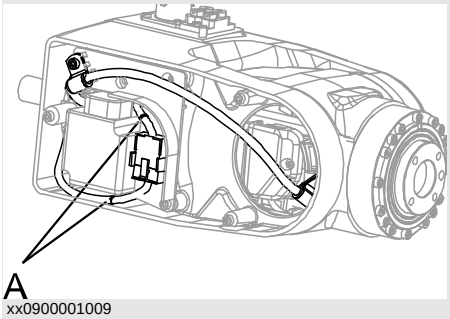 xx0900001009 Parts: • A: Cable straps (2 pcs)
6.	Disconnect connectors for motor axis 5: • R2.MP5 • R2.ME5	
7.	Unscrew the *attachment screws* securing *motor axis 5*.	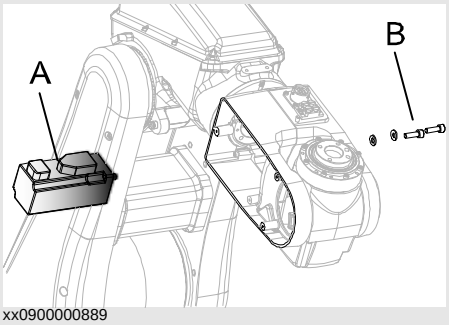 xx0900000889 Parts: • A: Motor axis 5 • B: Attachment screws and washers (2 + 2 pcs)
8.	Remove the *timing belt* from the *pulleys*.	See the figure in: • *Location of motor axis 5 on page 160*
9.	Remove the motor with pulley.	

Continues on next page

© Copyright 2009-2010 ABB. All rights reserved.

Refitting motor axis 5

Use this procedure to refit motor axis 5.

	Action	Info
1.	Check that: • all assembly surfaces are clean and without damages • the motor is clean and undamaged.	
2.	Place the motor in the wrist housing.	
3.	Reconnect connectors: • R2.MP5 • R2.ME5	
4.	Refit the *timing belt* on the *pulleys*.	See the figure in: • *Location of motor axis 5 on page 160*
5.	Tighten the *attachment screws* and *washers* securing the *motor*, just enough (4 Nm) to still be able to move the motor.	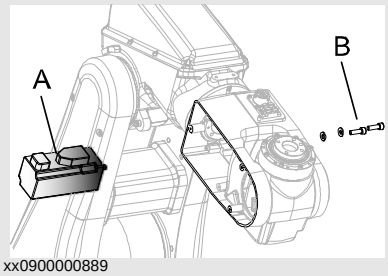 xx0900000889 Parts: • A: Motor axis 5 • B: Attachment screws and washers (2 + 2 pcs)
6.	Move the motor to a position where a good timing belt tension is reached.	**NOTE!** Do not strech the timing belt too much!
7.	Secure *motor axis 5* with its *attachment screws* and *washers*.	Tightening torque: 5.5 Nm. See the figure in: • *Location of motor axis 5 on page 160*

© Copyright 2009-2010 ABB. All rights reserved.

Continues on next page

	Action	Info
8.	Refit the *connector support*.	Tightening torque: 1 Nm. 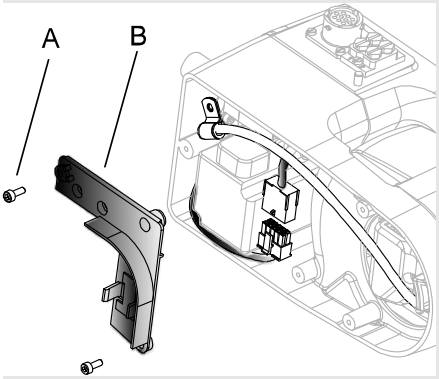 xx0900000888 Parts: • A: Attachment screws (2 pcs) • B: Connector support
9.	Refit the *clamp* with its *attachment screw*.	Tightening torque: 1 Nm. 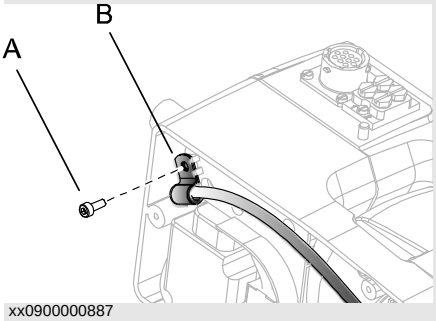 xx0900000887 Parts: • A: Attachment screw • B: Clamp
10.	Secure the cables with *cable straps*.	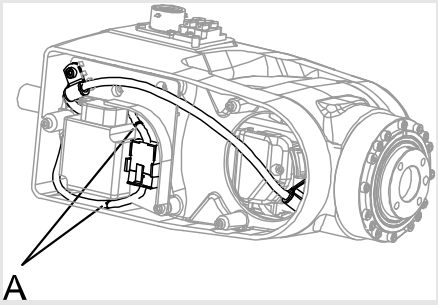 xx0900001009 Parts: • A: Cable straps (2 pcs)

© Copyright 2009-2010 ABB. All rights reserved.

Continues on next page

	Action	Info
11.	Refit the *wrist side covers*.	Tightening torque: 1 Nm. 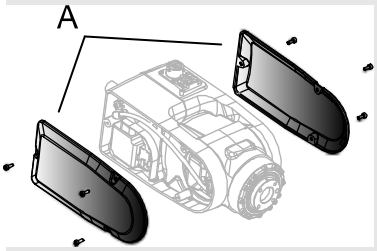 xx0900000886 Parts: • A: Wrist side covers (2 pcs)
12.	Recalibrate the robot.	See chapter: • *Calibration.*
13.	**DANGER!** Make sure all safety requirements are met when performing the first test run. These are further detailed in the section *DANGER - First test run may cause injury or damage! on page 40*.	

© Copyright 2009-2010 ABB. All rights reserved.

4.7.6. Replacing motor axis 6

Introduction

The motor axis 6 is delivered as part of the upper arm. How to replace the upper arm see section *Replacing the upper arm on page 122*.

Motor axis 6 is a part of the upper arm when ordered as a spare part. For more information how to replace motor axis 6, please **contact ABB**.

Location of motor axis 6

Motor axis 6 is located as shown in the figure.

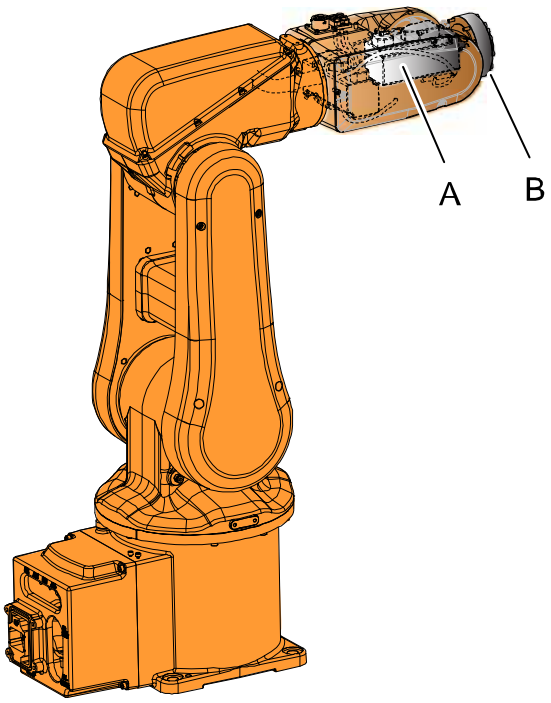

xx0900000910

A	Motor axis 6
B	Gearbox axis 6

© Copyright 2009-2010 ABB. All rights reserved.

4.8 Gearboxes

4.8.1. Replacing gearbox axis 1

Introduction

The gearbox axis 1 is delivered as a part of motor axis 1. For information how to replace motor with gearbox axis 1, see section *Replacing motor axis 1 with gearbox on page 133*.

© Copyright 2009-2010 ABB. All rights reserved.

4.8.2. Replacing gearbox axis 2

Introduction

The gearbox axis 2 is delivered as a part of motor axis 2. For information how to replace motor with gearbox axis 2, see section *Replacing motor axis 2, with gearbox on page 143*.

© Copyright 2009-2010 ABB. All rights reserved.

4.8.3. Replacing gearbox axis 3

Overview

Gearbox axis 3 is delivered as a part of the lower arm. For more information how to replace gearbox axis 3, please **contact ABB**.

Location of gearbox axis 3

Gearbox axis 3 is located as shown in the figure.

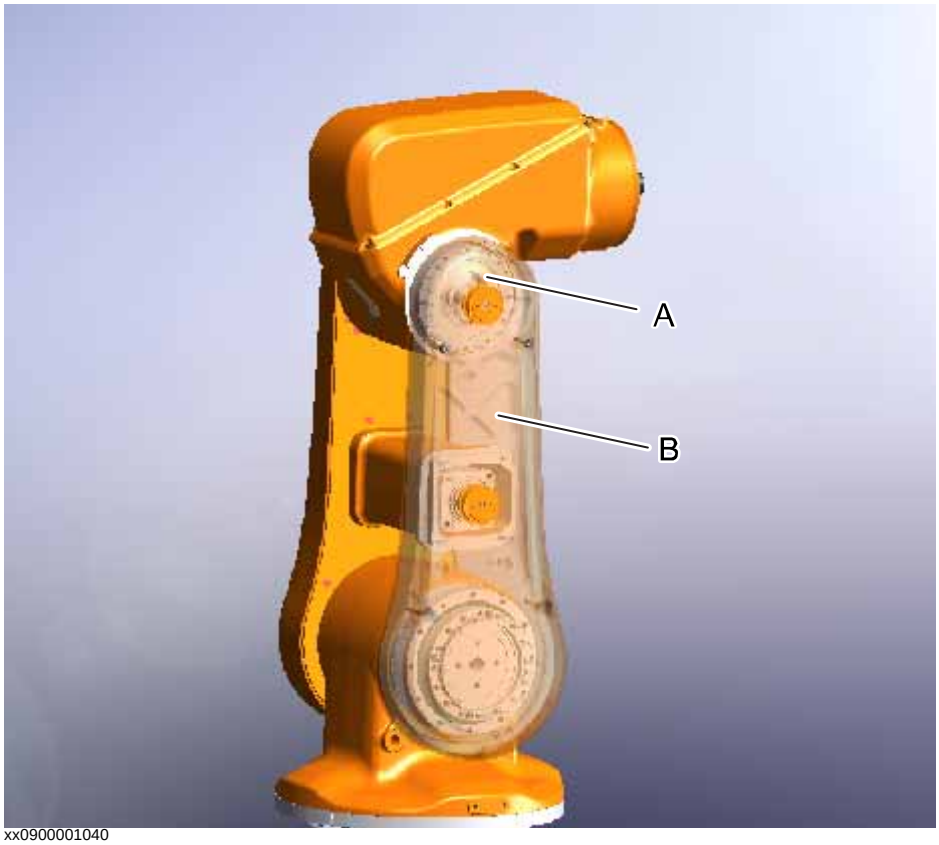

xx0900001040

A	Gearbox axis 3
B	Lower arm

© Copyright 2009-2010 ABB. All rights reserved.

4.8.4. Replacing gearbox axis 4

Introduction

Gearbox axis 4 is delivered as part of the upper arm.

How to replace the upper arm see:

- *Replacing the upper arm on page 122*

For more information how to replace gearbox axis 4, please **contact ABB**.

© Copyright 2009-2010 ABB. All rights reserved.

4.8.5. Replacing gearbox axis 5

Overview

Gearbox axis 5 is delivered as a part of the upper arm. How to replace the upper arm is decribed in section *Replacing the upper arm on page 122*.

For more information how to replace gearbox axis 5, please **contact ABB**.

Location of gearbox axis 5

Gearbox axis 5 is located as shown in the figure.

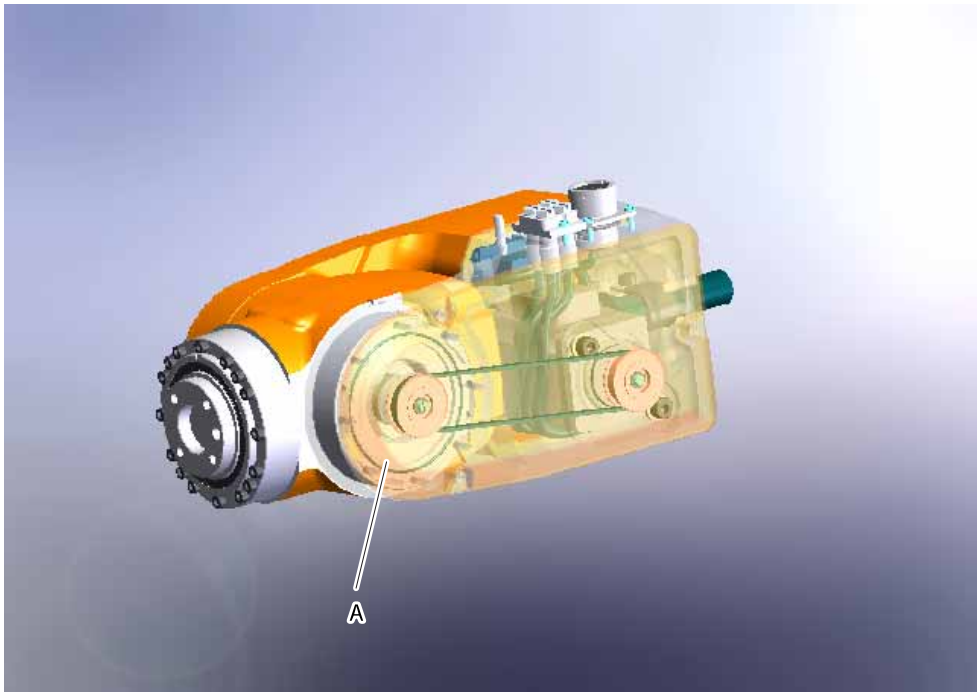

xx0900001041

A	Gearbox axis 5

© Copyright 2009-2010 ABB. All rights reserved.

4.8.6. Replacing gearbox axis 6

Introduction

The gearbox axis 6 is delivered as part of the upper arm. How to replace the upper arm is described in section *Replacing the upper arm on page 122*.

For more information how to replace gearbox axis 6, please **contact ABB**.

Location of gearbox axis 6

Gearbox axis 6 is located as shown in the figure:

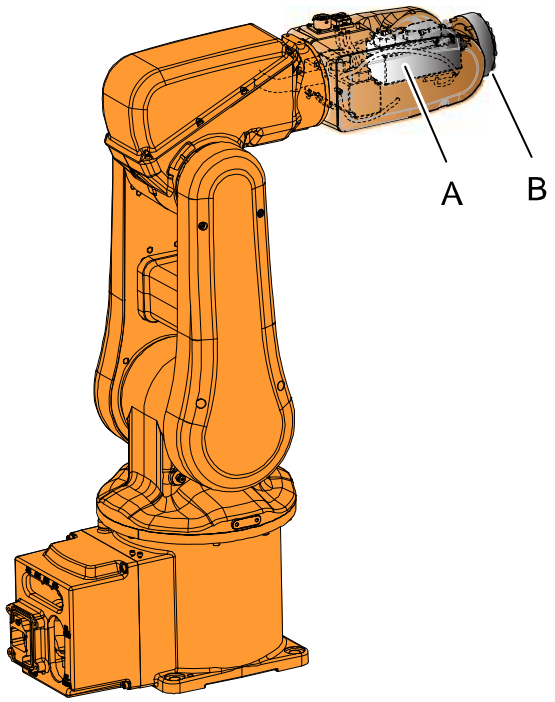

xx0900000910

A	Motor axis 6
B	Gearbox axis 6

© Copyright 2009-2010 ABB. All rights reserved.

5 Calibration

5.1. Introduction

Introduction

This chapter is a short description how to use the calibration pins and the synchronization marks on the robot.

© Copyright 2009-2010 ABB. All rights reserved.

5.2. Calibrating axes 1 - 6

Introduction

This section describes how to calibrate the robot and how to use the calibration pins when calibrating.

NOTE!

Only fine calibration can be done on the robot.

NOTE!

Calibration can be done in the following ways:

- axis 1, 2 and 3 at the same time using the FlexPendant
- axis 4, 5 and 6 at the same time using the FlexPendant
- each axis separately.

Location of calibration pins

The figure shows the position of the calibration pins on axes 1 - 6.

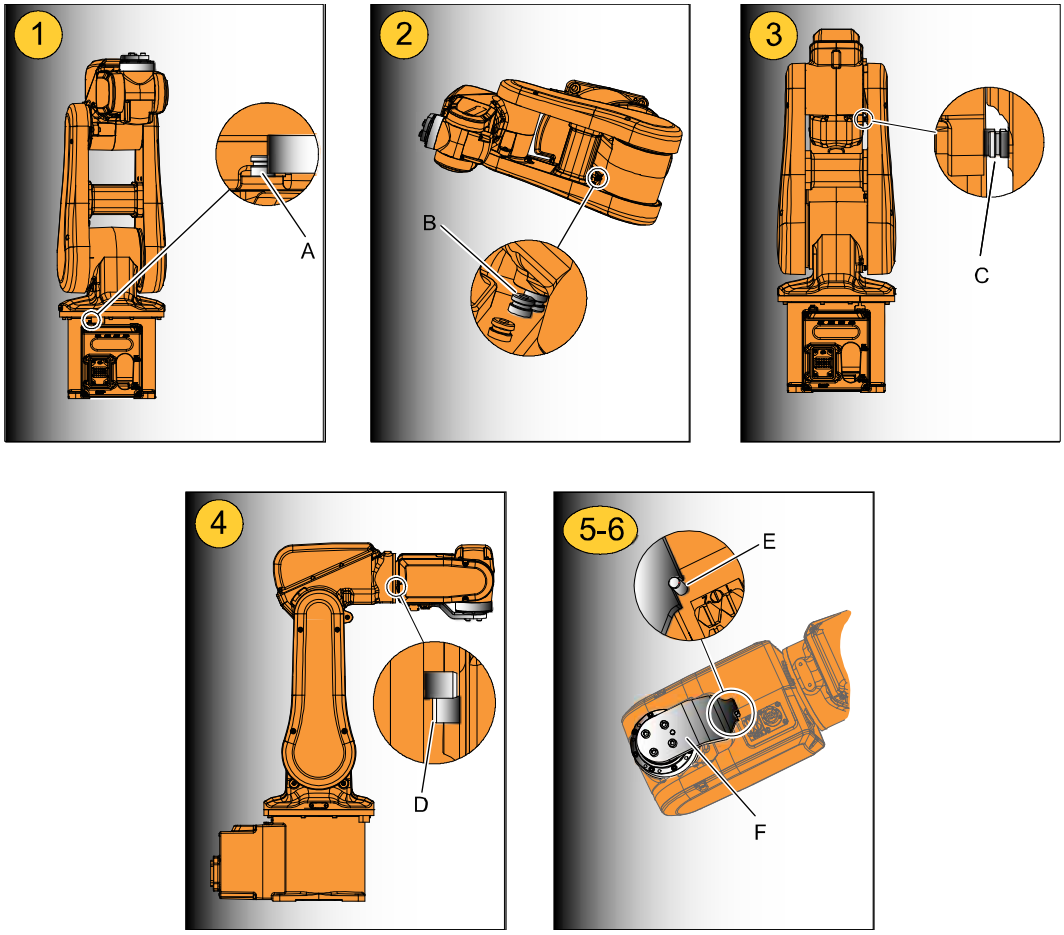

xx0900000627

1	Calibration, axis 1. (Rotate axis 1 -170.2°)
A	Calibration pins, axis 1
2	Calibration, axis 2. (Rotate axis 2 -115.1°)
B	Calibration pins, axis 2

Continues on next page

© Copyright 2009-2010 ABB. All rights reserved.

3	Calibration, axis 3. (Rotate axis 3 75.8°)
C	Calibration pins, axis 3
4	Calibration, axis 4. (Rotate axis 4 -174.7°)
D	Calibration pins, axis 4
5-6	Calibration, axis 5-6. (Rotate axis 5 -90° and axis 6 90°)
E	Calibration pin, axis 5-6
F	Calibration tool, axis 5-6

Required equipment

Equipment	Note
Standard toolkit	The content is defined in the section *Standard toolkit on page 191*.
Calibration tool kit.	For art. no. see chapter *Reference information*.

Calibration using the FlexPendant

This procedure describes how to calibrate the robot using the FlexPendant.

	Action	Note
1.	**DANGER!** Turn off all electric power, hydraulic and pneumatic pressure supplies to the robot!	
2.	Remove all dampers from the *calibration pins*.	See the figure in: • *Location of calibration pins on page 174*
3.	Fit the *calibration tool* on axis 6.	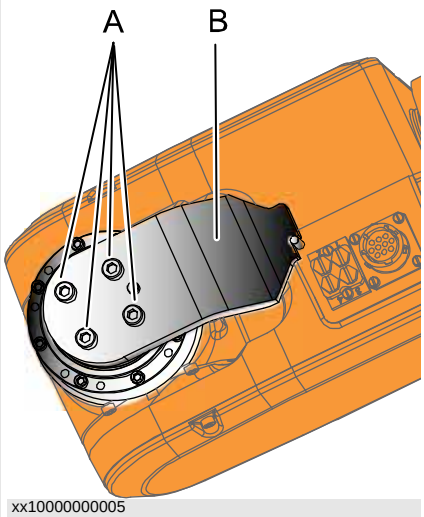 xx10000000005 Parts: • A: Attachment screws (4 pcs) • B: Calibration tool

Continues on next page

© Copyright 2009-2010 ABB. All rights reserved.

Continued

	Action	Note
4.	Release the brakes.	How to release the brakes see section: • *Manually releasing the brakes on page 55*
5.	Rotate axes 4, 5 and 6 manually until the two calibration pins of each axis are in contact with each other.	See the figure in: • *Location of calibration pins on page 174*
6.	Choose **fine calibration** from **Calib menu**.	
7.	Choose **Calibrate** on the FlexPendant.	
8.	Choose **axes 4, 5 and 6** on the FlexPendant and **Calibrate**.	
9.	After calibration is done, use the FlexPendant to jog each axis to zero degree.	
10.	Rotate axes 1, 2 and 3 manually until the two calibration pins of each axis are in contact with each other.	See the figure in: • *Location of calibration pins on page 174*
11.	Choose **fine calibration** from **Calib menu**.	
12.	Choose **axes 1, 2 and 3** on the FlexPendant and **Calibrate**.	
13.	The *synchronisation marks* on each axis shall now be matched.§	See section: • *Synchronization marks axes 1-6 on page 180*

Calibration of axis 1 separately

Use this procedure when calibrating axis 1 separately.

	Action	Info
1.	**DANGER!** Turn off all electric power, hydraulic and pneumatic pressure supplies to the robot!	
2.	Remove the dampers from the *calibration pins*.	See the figure in: • *Location of calibration pins on page 174*
3.	Release the brakes.	See section: • *Manually releasing the brakes on page 55*
4.	Rotate axis 1 manually until the two *calibration pins* are in contact with each other.	See figure in: • *Location of calibration pins on page 174*
5.	Choose fine calibration from Calib menu.	
6.	Choose Calibrate on the the FlexPendant.	
7.	Choose axis 1 on the FlexPendant and Calibrate.	

© Copyright 2009-2010 ABB. All rights reserved.

Continues on next page

Continued

	Action	Info
8.	After calibration is done use the FlexPendant to jog each axis to zero degree.	
9.	The *synchronisation marks* on axis 1 shall now be matched.	See section: • *Synchronization marks axes 1-6 on page 180*

Calibration of axis 2 separately

Use this procedure when calibrating axis 2 separately.

	Action	Info
1.	**DANGER!** Turn off all electric power, hydraulic and pneumatic pressure supplies to the robot!	
2.	Remove the dampers from the *calibration pins*.	See the figure in: • *Location of calibration pins on page 174*
3.	Release the brakes.	See section: • *Manually releasing the brakes on page 55*
4.	Rotate axis 2 manually until the two *calibration pins* are in contact with each other.	See figure 2 in: • *Location of calibration pins on page 174*
5.	Choose fine calibration from Calib menu.	
6.	Choose Calibrate on the the FlexPendant.	
7.	After calibration is done use the FlexPendant to jog each axis to zero degree.	
8.	The *synchronisation marks* on axis 2 shall now be matched	See section: • *Synchronization marks axes 1-6 on page 180*

Calibration of axis 3 separately

Use this procedure when calibrating axis 3 separately.

	Action	Info
1.	**DANGER!** Turn off all electric power, hydraulic and pneumatic pressure supplies to the robot!	
2.	Remove the dampers from the *calibration pins*.	See the figure in: • *Location of calibration pins on page 174*

Continues on next page

© Copyright 2009-2010 ABB. All rights reserved.

Continued

	Action	Info
3.	Release the brakes.	See section: • *Manually releasing the brakes on page 55*
4.	Rotate axis 3 manually until the two *calibration pins* are in contact with each other.	See figure 3 in: • *Location of calibration pins on page 174*
5.	Choose fine calibration from Calib menu.	
6.	Choose Calibrate on the the FlexPendant.	
7.	After calibration is done use the FlexPendant to jog each axis to zero degree.	
8.	The *synchronisation marks* on axis 3 shall now be matched.	See section: • *Synchronization marks axes 1-6 on page 180*

Calibration of axis 4 separately

Use this procedure when calibrating axis 4 separately.

	Action	Info
1.	**DANGER!** Turn off all electric power, hydraulic and pneumatic pressure supplies to the robot!	
2.	Release the brakes.	See section: • *Manually releasing the brakes on page 55*
3.	Rotate axis 4 manually until the two *calibration pins* are in contact with each other.	See the figure 4 in: • *Location of calibration pins on page 174*
4.	Choose fine calibration from Calib menu.	
5.	Choose Calibrate on the the FlexPendant.	
6.	After calibration is done use the FlexPendant to jog each axis to zero degree	
7.	The *synchronisation marks* on axis 4 shall now be matched.	See section: • *Synchronization marks axes 1-6 on page 180*

© Copyright 2009-2010 ABB. All rights reserved.

Continues on next page

Calibration of axes 5 and 6 using the calibration tool

Use this procedure when calibrating axes 5 and 6 separately.

	Action	Info
1.	**DANGER!** Turn off all electric power, hydraulic and pneumatic pressure supplies to the robot!	
2.	Fit the *calibration tool* on the wrist with its *attachment screws*.	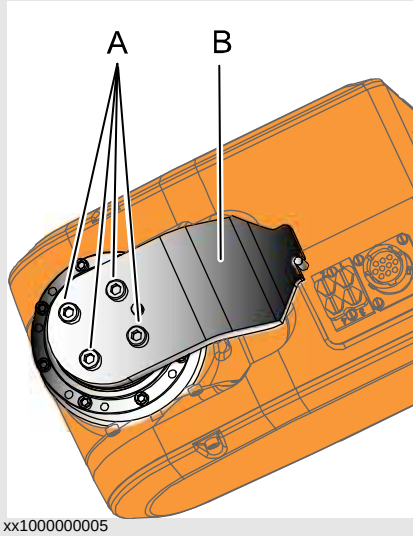 xx1000000005 Parts: • A: Attachment screws (4 pcs) • B: Calibration tool
3.	Release the brakes.	See section: • *Manually releasing the brakes on page 55*
4.	Rotate axes 5 and 6 manually until the *calibration pin* on the wrist and the *fork* of the tool are in contact with each other.	See figure 5-6 in: • *Location of calibration pins on page 174*
5.	Choose fine calibration from Calib menu.	
6.	Choose Calibrate on the the FlexPendant.	
7.	After calibration is done use the FlexPendant to jog each axis to zero degree.	
8.	The *synchronisation marks* on axes 5 and 6 shall now be matched.	See section: • *Synchronization marks axes 1-6 on page 180*

© Copyright 2009-2010 ABB. All rights reserved.

5.3. Synchronization marks axes 1-6

Introduction

This section specifies the position of the synchronization marks.

How to calibrate the robot is described in section *Calibrating axes 1 - 6 on page 174*.

NOTE!

These synchronization marks can **not** be used for updating encoder revolution. The updating of encoder revolution shall be done in calibration position.

Location of the synchronization marks

The figures shows the synchronization marks on the robot.

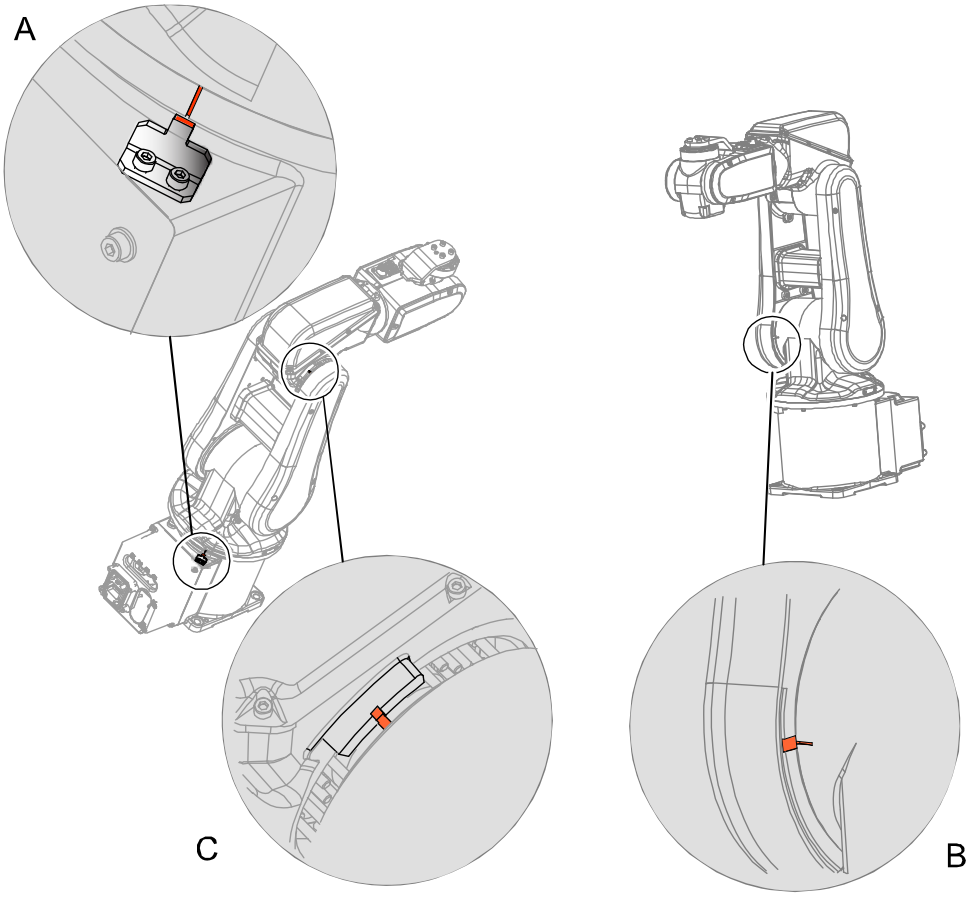

xx0900000574

The figure shows the synchronization marks on axes 1-3.

A	Synchronization mark, axis 1
B	Synchronization mark, axis 2
C	Synchronization mark, axis 3

© Copyright 2009-2010 ABB. All rights reserved.

Continues on next page

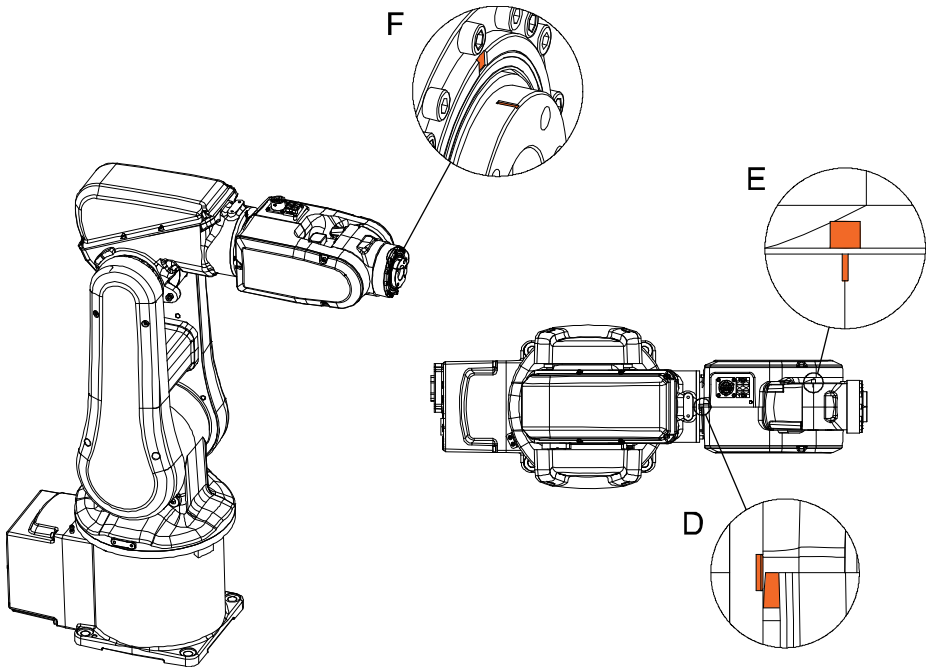

xx0900000575

The figure shows the synchronization marks on axes 4-6.

D	Synchronization mark, axis 4
E	Synchronization mark, axis 5
F	Synchronization mark, axis 6

© Copyright 2009-2010 ABB. All rights reserved.

© Copyright 2009-2010 ABB. All rights reserved.

6 Decommissioning

6.1. Introduction

Introduction

This section contains information to consider when taking a product, robot or controller, out of operation.

It deals with how to handle potentially dangerous components and potentially hazardous materials.

General

All used grease/oils and dead batteries **must** be disposed of in accordance with the current legislation of the country in which the robot and the control unit are installed.

If the robot or the control unit is partially or completely disposed of, the various parts **must** be grouped together according to their nature (that is, all iron together and all plastic together), and disposed of accordingly. These parts **must** also be disposed of in accordance with the current legislation of the country in which the robot and control unit are installed.

© Copyright 2009-2010 ABB. All rights reserved.

6.2. Environmental information

Hazardous material

The table specifies some of the materials in the robot and their respective use throughout the product.

Dispose of the components properly to prevent health or environmental hazards.

Material	Example application
Batteries, NiCad or Lithium	Encoder Interface Board
Copper	Cables, motors
Cast iron/nodular iron	Upper arm
Steel	Gears, screws, shafts, brackets etc.
Neodymium	Brakes, motors
Plastic/rubber (PVC)	Cables, connectors, drive belts, covers and so on.
Oil, grease	Gearboxes
Aluminium	Structure

Oil and grease

Where possible, arrange for the oil and grease to be recycled. Dispose of via an authorized person/contractor in accordance with local regulations. Do not dispose of oil and grease near lakes, ponds, ditches, down drains or onto soil. Incineration must be carried out under controlled conditions in accordance with local regulations.

Also note that:

- Spills may form a film on water surfaces causing damage to organisms. Oxygen transfer could also be impaired.
- Spillage may penetrate the soil causing ground water contamination.

© Copyright 2009-2010 ABB. All rights reserved.

7 Reference information

7.1. Introduction

General

This chapter includes general information, complementing the more specific information in the different procedures in the manual.

© Copyright 2009-2010 ABB. All rights reserved.

7.2. Applicable safety standards

Standards, EN ISO

The manipulator system is designed in accordance with the requirements of:

Standard	Description
EN ISO 12100 -1	Safety of machinery - Basic concepts, general principles for design - Part 1: Basic terminology, methodology
EN ISO 12100 -2	Safety of machinery - Basic concepts, general principles for design - Part 2: Technical principles
EN ISO 13849-1	Safety of machinery, safety related parts of control systems - Part 1: General principles for design
EN ISO 13850	Safety of machinery - Emergency stop - Principles for design
EN ISO 10218-1[1]	Robots for industrial environments - Safety requirements -Part 1 Robot
EN ISO 9787	Manipulating industrial robots, Coordinate systems and motion nomenclatures
EN ISO 9283	Manipulating industrial robots, Performance criteria and related test methods
EN ISO 14644-1[2]	Classification of air cleanliness
EN ISO 13732-1	Ergonomics of the thermal environment - Part 1
EN IEC 61000-6-4 (option 129-1)	EMC, Generic emission
EN IEC 61000-6-2	EMC, Generic immunity
EN IEC 60974-1[3]	Arc welding equipment - Part 1: Welding power sources
EN IEC 60974-10[3]	Arc welding equipment - Part 10: EMC requirements
EN IEC 60204-1	Safety of machinery - Electrical equipment of machines - Part 1 General requirements
IEC 60529	Degrees of protection provided by enclosures (IP code)

1. There is a deviation from paragraph 6.2 in that only worst case stop distances and stop times are documented.

2. Only robots with Protection Clean Room.

3. Only valid for arc welding robots. Replaces EN IEC 61000-6-4 for arc welding robots.

European standards

Standard	Description
EN 614-1	Safety of machinery - Ergonomic design principles - Part 1: Terminology and general principles
EN 574	Safety of machinery - Two-hand control devices - Functional aspects - Principles for design
EN 953	Safety of machinery - General requirements for the design and construction of fixed and movable guards

© Copyright 2009-2010 ABB. All rights reserved.

Continues on next page

Other standards

Standard	Description
ANSI/RIA R15.06	Safety Requirements for Industrial Robots and Robot Systems
ANSI/UL 1740 (option 429-1)	Safety Standard for Robots and Robotic Equipment
CAN/CSA Z 434-03 (option 429-1)	Industrial Robots and Robot Systems - General Safety Requirements

© Copyright 2009-2010 ABB. All rights reserved.

7.3. Unit conversion

Converter table

Use the table below to convert units used in this manual.

Quantity	Units		
Length	1 m	3.28 ft	39.37 in
Weight	1 g	0,035 ounces	
Pressure	1 bar	100 kPa	14.5 psi
Force	1 N	0.738 lbf	
Moment	1 Nm	0.738 lbf-tn	
Volume	1 L	0.264 US gal	

© Copyright 2009-2010 ABB. All rights reserved.

7.4. Screw joints

General

This section details how to tighten the various types of screw joints on the robot.

The instructions and torque values are valid for screw joints comprised of metallic materials and do *not* apply to soft or brittle materials.

UNBRAKO screws

UNBRAKO is a special type of screw recommended by ABB for certain screw joints. It features special surface treatment (Gleitmo as described below) and is extremely resistant to fatigue.

Whenever used, this is specified in the instructions, and in such cases, *no other type of replacement screw* is allowed. Using other types of screws will void any warranty and may potentially cause serious damage or injury.

Gleitmo treated screws

Gleitmo is a special surface treatment to reduce the friction when tightening the screw joint. Screws treated with Gleitmo may be reused 3-4 times before the coating disappears. After this the screw must be discarded and replaced with a new one.

When handling screws treated with Gleitmo, protective gloves of nitrile rubber type should be used.

Screws lubricated in other ways

Screws lubricated with Molycote 1000 should *only* be used when specified in the repair, maintenance or installation procedure descriptions.

In such cases, proceed as follows:

1. Apply lubricant to the screw thread.
2. Apply lubricant between the plain washer and screw head.
3. Tighten to the torque as described in the procedures.

Lubricant	Art. no.
Molycote 1000 (molybdenum disulphide grease)	11712016-618

© Copyright 2009-2010 ABB. All rights reserved.

7.5. Weight specifications

Definition

In installation, repair and maintenance procedures, weights of the components handled are sometimes specified. All components exceeding 22 kg (50 lbs) are highlighted in this way.

To avoid injury, ABB recommends the use of lifting equipment when handling components with a weight exceeding 22 kg. A wide range of lifting tools and devices are available for each manipulator model.

Example

Below is an example of how a weight specification is presented, inside a procedure table:

	Action	Note
	CAUTION! The motor weighs 32 kg! All lifting equipment used must be sized accordingly!	

© Copyright 2009-2010 ABB. All rights reserved.

7.6. Standard toolkit

General

All service (repairs, maintenance and installation) procedures contain lists of tools required to perform the specified activity.

All special tools required are listed directly in the procedures while all the tools that are considered standard are gathered in the Standard toolkit and defined in the table below.

This way, the tools required are the sum of the Standard toolkit and any tools listed in the instruction.

Contents, standard toolkit

Qty	Tool
1	Socket head cap 2.5-17 mm
1	Torque wrench 0.5-10 Nm
1	Small screwdriver
1	Plastic mallet
1	Ratchet head for torque wrench 1/2
1	Socket head cap no. 2.5, socket 1/2" bit L 110 mm
1	Small cutting plier
1	T-handle with ball head

© Copyright 2009-2010 ABB. All rights reserved.

7.7. Special tools

General

All service instructions contain lists of tools required to perform the specified activity. The required tools are a sum of standard tools, defined in the section *Standard toolkit on page 191*, and of special tools, listed directly in the instructions and also gathered in this section.

Calibration tool set

The table specifies the calibration equipment needed when calibrating axes 5 and 6 of the robot.

Description	Art. no.	Note
Calibration tool set	3HAC037305-001	Includes: • calibration tool axes 5 and 6 • attachment screws M5x12 quality Steel 8.8-A2F (4 pcs) • guide pin

Lifting tool set

The table specifies the lifting tool set needed when lifting the complete robot.

Description	Art. no.	Note
Lifting tool set	3HAC037304-001	Includes: • bracket • attachment screws (wrist) M5x12 quality Steel 8.8-A2F (2 pcs) • spring washers, conical (wrist) 5.3x11x1.2 quality Steel-mZn12c (2 pcs) • attachment screws DIN912 (swing housing) M4x8 quality Steel 8.8-ELZN (2 pcs) • conical spring washers 4 mm (swing housing) 4.3x9x1.3 quality Steel-MZn12C (2 pcs)

© Copyright 2009-2010 ABB. All rights reserved.

7.8. Lifting equipment and lifting instructions

General

Many repair and maintenance activities require different pieces of lifting equipment, which are specified in each procedure.

The use of each piece of lifting equipment is *not* detailed in the activity procedure, but in the instruction delivered with each piece of lifting equipment.

This implies that the instructions delivered with the lifting equipment should be stored for later reference.

© Copyright 2009-2010 ABB. All rights reserved.

© Copyright 2009-2010 ABB. All rights reserved.

8 Spare parts

8.1. Spare parts - Axes 1 and 2

Spare parts axes 1-2

Link to *Illustration axes 1-2 on page 196*.

Item	Description	Spare part no.
1	Base with mechanical stop	3HAC035896-001
2	Rotational AC motor, including gearbox (axes 1 & 2)	3HAC037281-001
4	Cable guide	3HAC031119-001
6	Mechanical stop pin	3HAC031694-001
9	VK-cover	3HAA2166-23
10	Swing plate with mechanical stop	3HAC035897-001
11	Cable guide	3HAC031133-001
15	Swing housing with mechanical stop	3HAC035900-001
16	Damper	3HAC031871-001
17	Cable guide	3HAC031134-001
18	Cable guide	3HAC031135-001
20	Calibration bracket	3HAC033060-001

© Copyright 2009-2010 ABB. All rights reserved.

Continues on next page

Illustration axes 1-2

Link to *Spare parts axes 1-2 on page 195*.

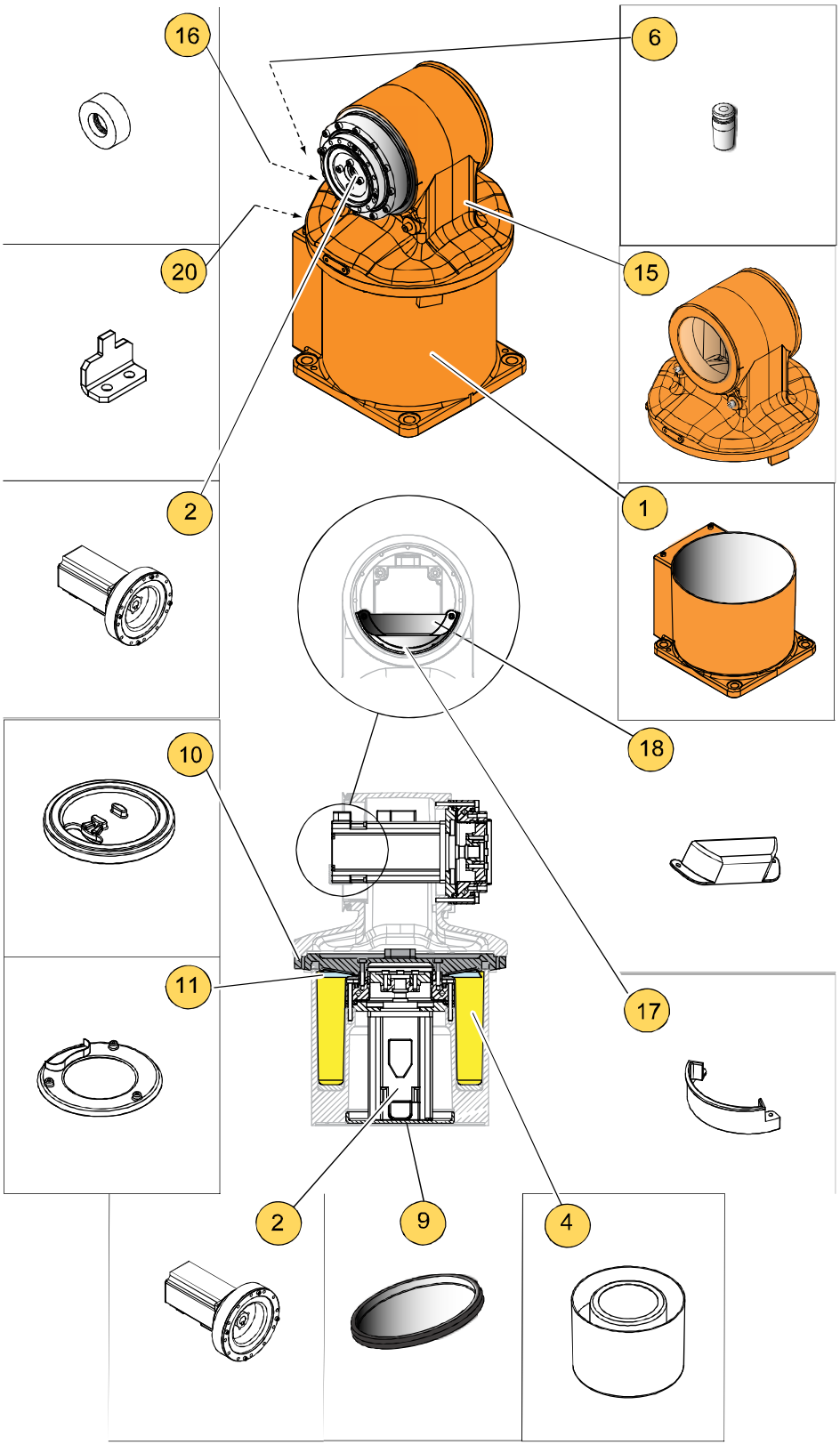

xx0900000498

© Copyright 2009-2010 ABB. All rights reserved.

8.2. Spare parts - Axis 3

Spare parts, axis 3

Link to *Illustration, spare parts axis 3 on page 198*.

Item	Description	Spare part no.
1	Lower arm with mechanical stop (Including gearbox axis 3)	3HAC035901-001
2	Motor unit with timing belt wheel	3HAC031904-001
5	Motor cover (axis 3)	3HAC035902-001
10	Timing belt	3HAC031901-001
11	Mechanical stop pin	3HAC031694-001
13	Damper	3HAC031871-001
6	Lower arm cover	3HAC035904-001

© Copyright 2009-2010 ABB. All rights reserved.

Continues on next page

Continued

Illustration, spare parts axis 3

Link to *Spare parts, axis 3 on page 197*.

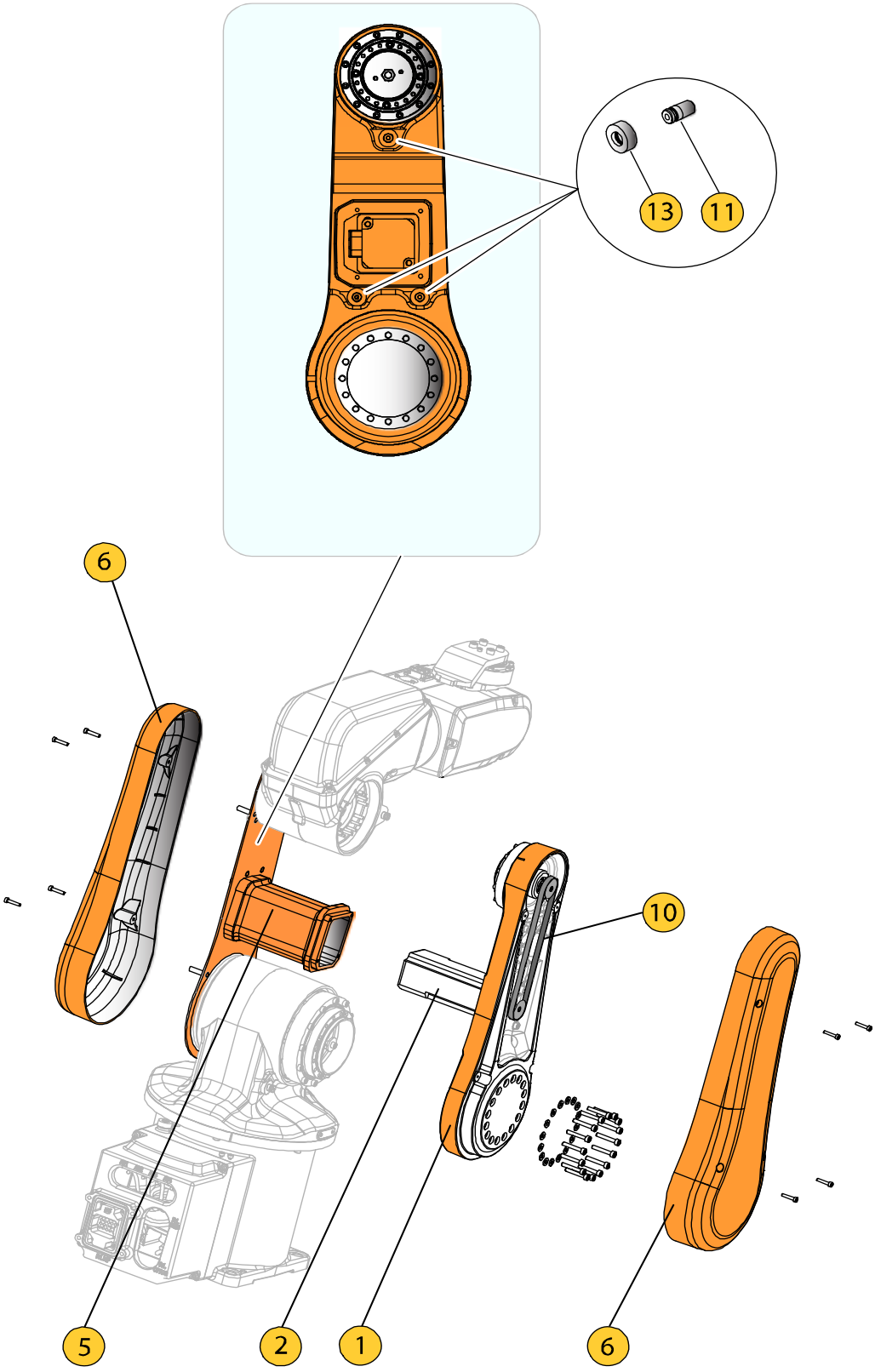

© Copyright 2009-2010 ABB. All rights reserved.

8.3. Spare parts - Lower arm, side support

Spare parts, lower arm side support

Link to *Illustration, Lower arm side support on page 200*.

Item	Description	Spare part no.
1	Lower arm, side support	3HAC031894-001
2	Cable protection cover axis 3	3HAC031126-001

© Copyright 2009-2010 ABB. All rights reserved.

Continues on next page

Continued

Illustration, Lower arm side support

Link to *Spare parts, lower arm side support on page 199*.

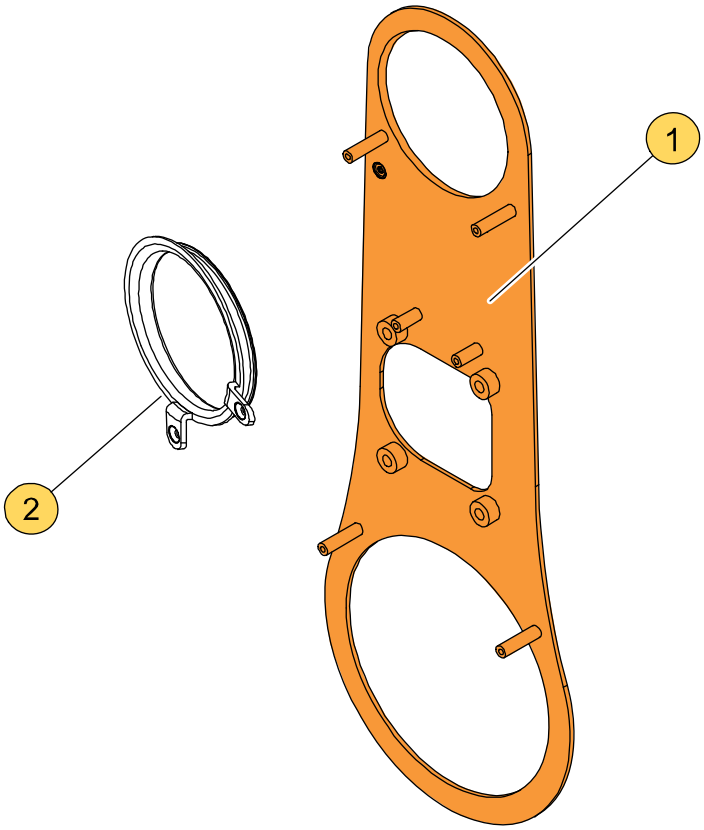

xx0900000500

© Copyright 2009-2010 ABB. All rights reserved.

8.4. Spare parts - Upper arm unit

Spare parts upper arm unit

Lint to *Illustration, upper arm unit on page 202*.

Item	Description	Spare part no.
A	Upper arm with wrist, mechanical (Motor axes 4 and 6 with gearbox included)	3HAC035914-001
2	Arc shaft cover	3HAC031121-001
13	Cable protector	3HAC031123-001
23	Housing inner cover	3HAC031122-001
7	Housing cover	3HAC035906-001

© Copyright 2009-2010 ABB. All rights reserved.

Continues on next page

Illustration, upper arm unit

Link to *Spare parts upper arm unit on page 201*.

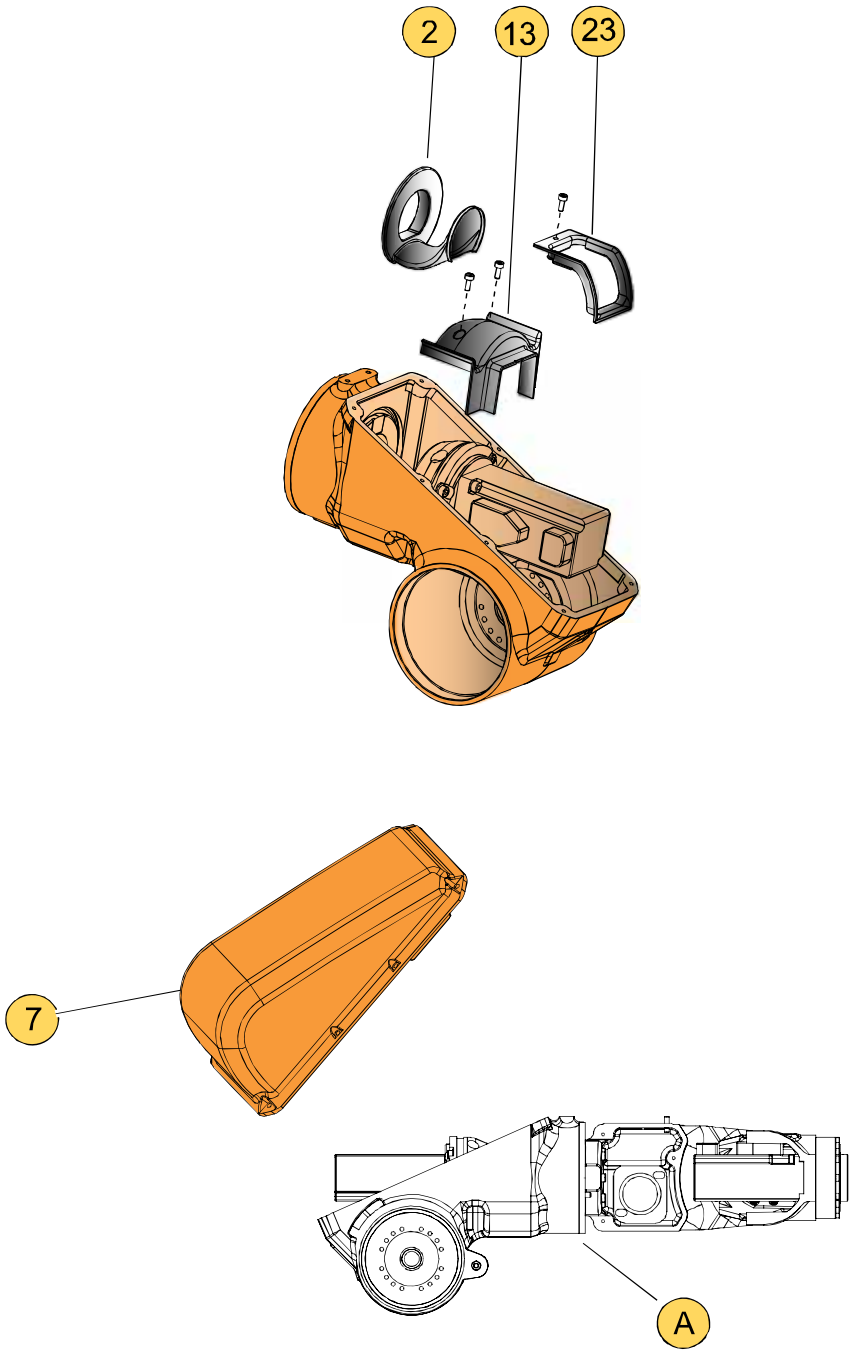

xx0900000544

© Copyright 2009-2010 ABB. All rights reserved.

8.5. Spare parts - Wrist unit

Spare parts. wrist unit

Link to *Illustration, spare parts wrist unit on page 204*.

Item	Description	Spare parts no.
4	Carrier ring	3HAC031653-001
7	Motor unit with timing belt pulley	3HAC037303-001
8	Timing belt	3HAC031828-001
(8)	Wrist housing, plastic	3HAC035910-001
(9)	Wrist side cover	3HAC035911-001
(10)	Tilt cover	3HAC035912-001
16	Rotational AC motor with gearbox (Included in the upper arm unit.)	See *Spare parts - Upper arm unit on page 201*.

© Copyright 2009-2010 ABB. All rights reserved.

Continues on next page

Illustration, spare parts wrist unit

Link to *Spare parts. wrist unit on page 203*.

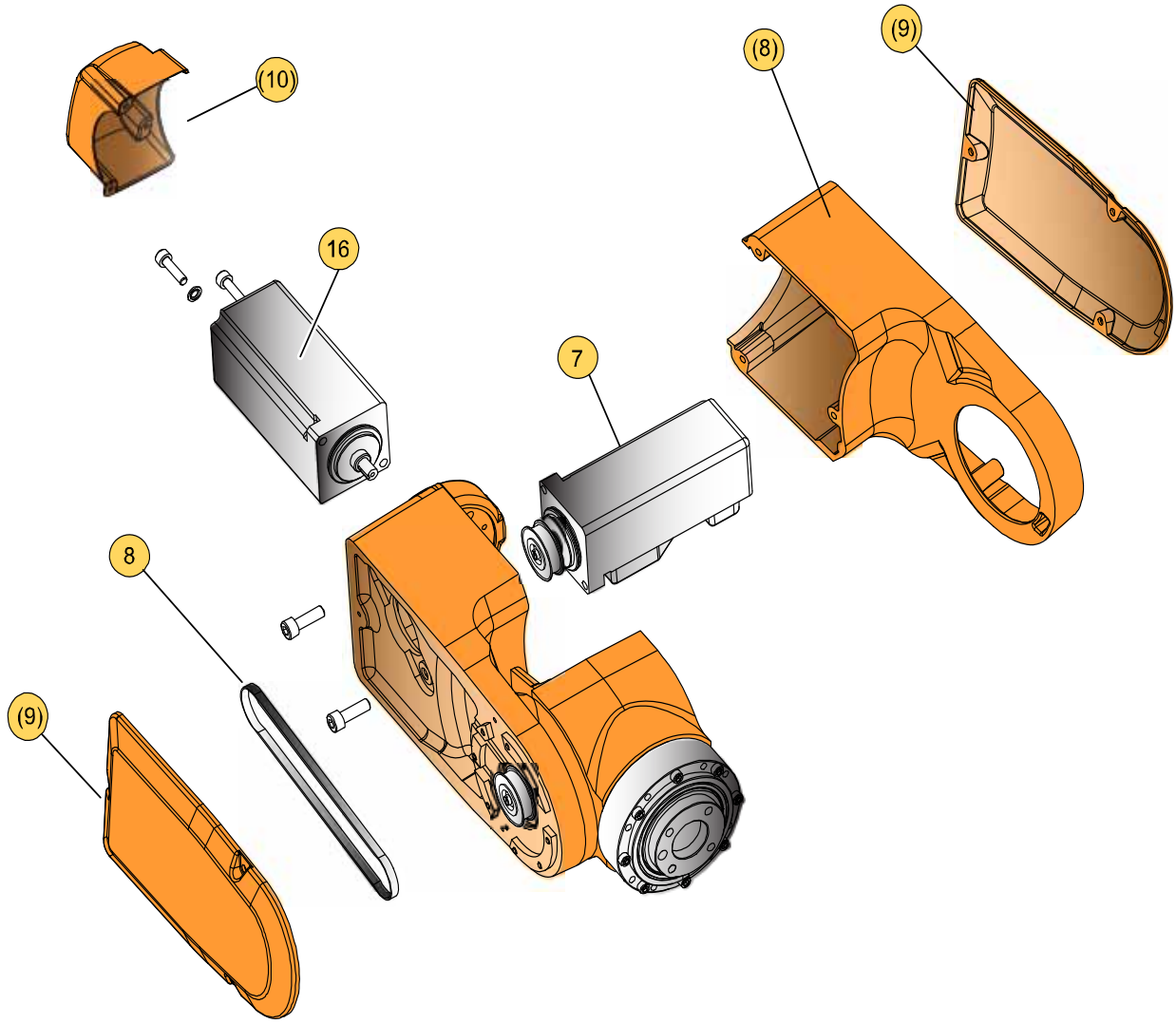

xx0900000551

© Copyright 2009-2010 ABB. All rights reserved.

8.6. Spare parts - Cable harness

Introduction

The spare parts in this section covers cable harness.

Description	Spare part no.
Cable harness main	3HAC032095-001
Cable harness EIB	3HAC032076-001
Cable harness CP/CS	3HAC032296-001
EIB DSQC401	3HAC032243-001
Battery pack	3HAC033492-001
Connector set R1.CP/CS	3HAC037038-001
Connector set R3.CP/CS	3HAC037070-001

© Copyright 2009-2010 ABB. All rights reserved.

© Copyright 2009-2010 ABB. All rights reserved.

9 Circuit diagram

9.1. About circuit diagrams

Overview

The circuit diagrams are not included in this manual but delivered as separate documents on the documentation DVD. See below for correct article numbers.

Controllers

Product	Article numbers for circuit diagrams
IRC5 with Drive System 04	3HAC024480-004
IRC5 with Drive System 09	3HAC024480-005
IRC5 Panel Mounted Controller	3HAC026871-005
IRC5 Compact	3HAC031403-003

Manipulators

Product	Article numbers for circuit diagrams
IRB 120	3HAC031408-003
IRB 140	3HAC6816-3
IRB 260	3HAC025611-001
IRB 360	3HAC028647-009
IRB 660	3HAC025691-001
IRB 1410	3HAC2800-3
IRB 1600	3HAC021351-003
IRB 2400	3HAC6670-3
IRB 2600	3HAC029570-007
IRB 4400/4450S	3HAC9821-1 3HAC9821-1
IRB 4600	3HAC029038-003
IRB 6400RF	3HAC8935-1
IRB 6600 type A	3HAC025744-001
IRB 6600 type B	3HAC025744-001
IRB 6620	3HAC025090-001
IRB 6620LX	3HAC025090-001
IRB 6640	3HAC025744-001
IRB 6650S	3HAC025744-001
IRB 6660	3HAC029940-001 (DressPack) 3HAC025744-001
IRB 7600	3HAC025744-001

© Copyright 2009-2010 ABB. All rights reserved.

© Copyright 2009-2010 ABB. All rights reserved.

B

brakes
testing function 27

C

carbon dioxide extinguisher 25
connection
external safety devices 16

D

danger levels 33

E

emergency stop
definition 31
devices 32
enabling device 29
ESD
damage elimination 41
sensitive equipment 41
wrist strap connection point 41

F

fire extinguishing 25

G

Gravity Beta 64

H

hold-to-run 29

I

inverted mounting 64

L

labels
manipulator 35
lifting equipment 190

M

manipulator
labels 35
symbols 35

O

oil change
safety risks 43

P

protection standards 186

R

responsibility and validity 16

S

safety
brake testing 27
emergency stop 31
ESD 41
fence dimensions 24
fire extinguishing 25
FlexPendant 29
introduction 15
manipulator system 16
moving manipulators 39
reduced speed function 28
release manipulator arm 26
service 16
signals 33
signals in manual 33
symbols 33
symbols on manipulator 35
test run 40
working range 30
wrist strap 41
safety risk
electric parts 23
hot parts 19
hydraulic system 21
installation 17
oil change 43
operational disturbance 22
pneumatic system 21
tools 20
voltage 23
safety risks
service work 17
work pieces 20
safety signals
in manual 33
safety standards 186
signals
safety 33
special tools 192
standards
ANSI 187
CAN 187
EN 186
EN IEC 186
EN ISO 186
protection 186
safety 186
suspended mounting 64
symbols
safety 33
system parameter
Gravity Beta 64

T

testing
brakes 27
tilted mounting 64
tools
for service 192

© Copyright 2009-2010 ABB. All rights reserved.

V

validity and responsibility 16

W

wall mounting 64

© Copyright 2009-2010 ABB. All rights reserved.

3HAC035728-001, Revision B, en

ABB AB
Robotics Products
S-721 68 VÄSTERÅS
SWEDEN
Telephone: +46 (0) 21 344000