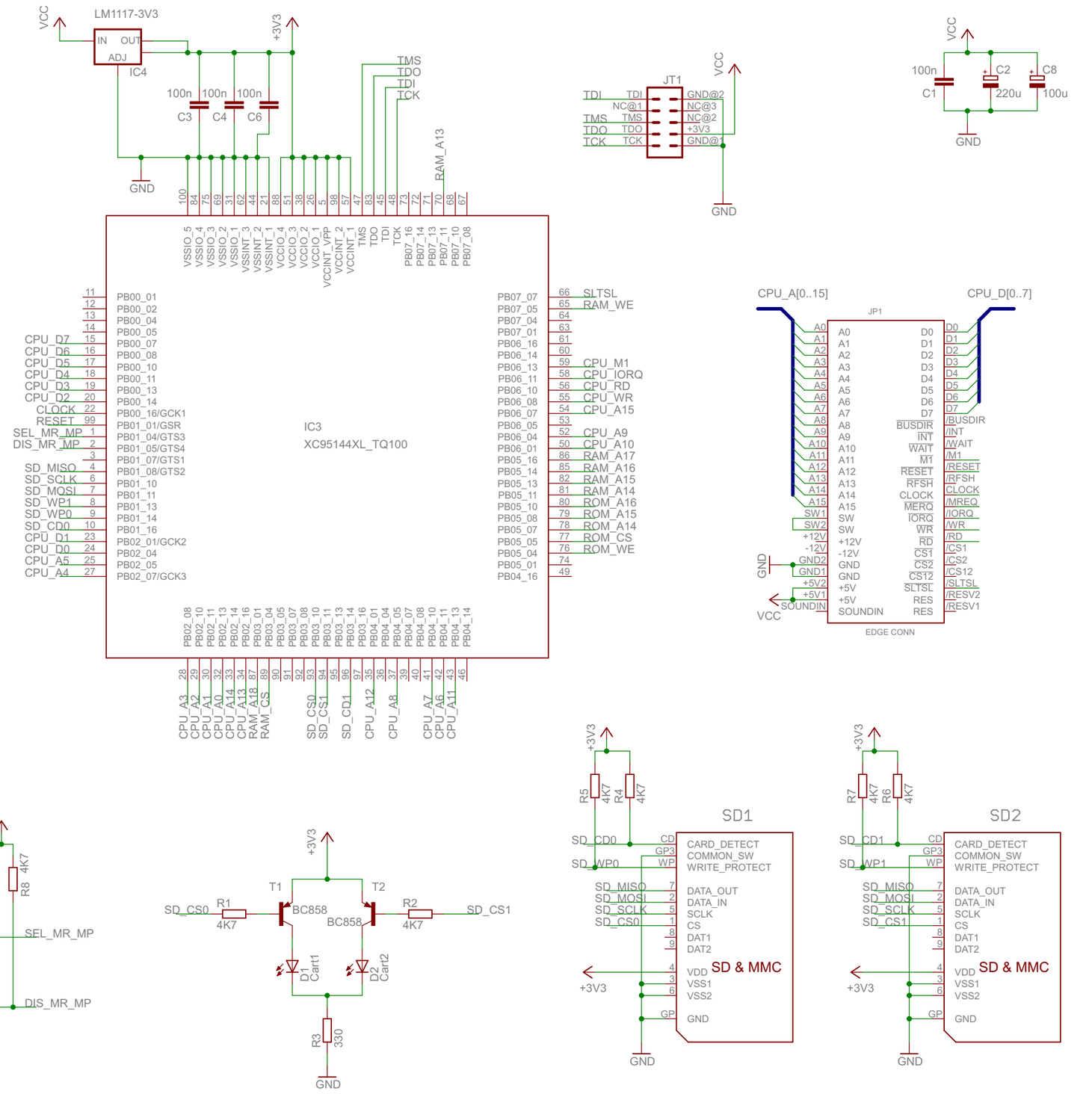

Copyright (c) 2014
Fabio Belavenuto
Licenced under
CERN OHL v1.1
http://ohwr.org/cernohl

PCB by Luciano Sturaro

MSX SD Mapper/Megaram

TITLE: sdmapper

Document Number:

REV:

Date: 12/09/2014 00:59:55

Sheet: 1/1