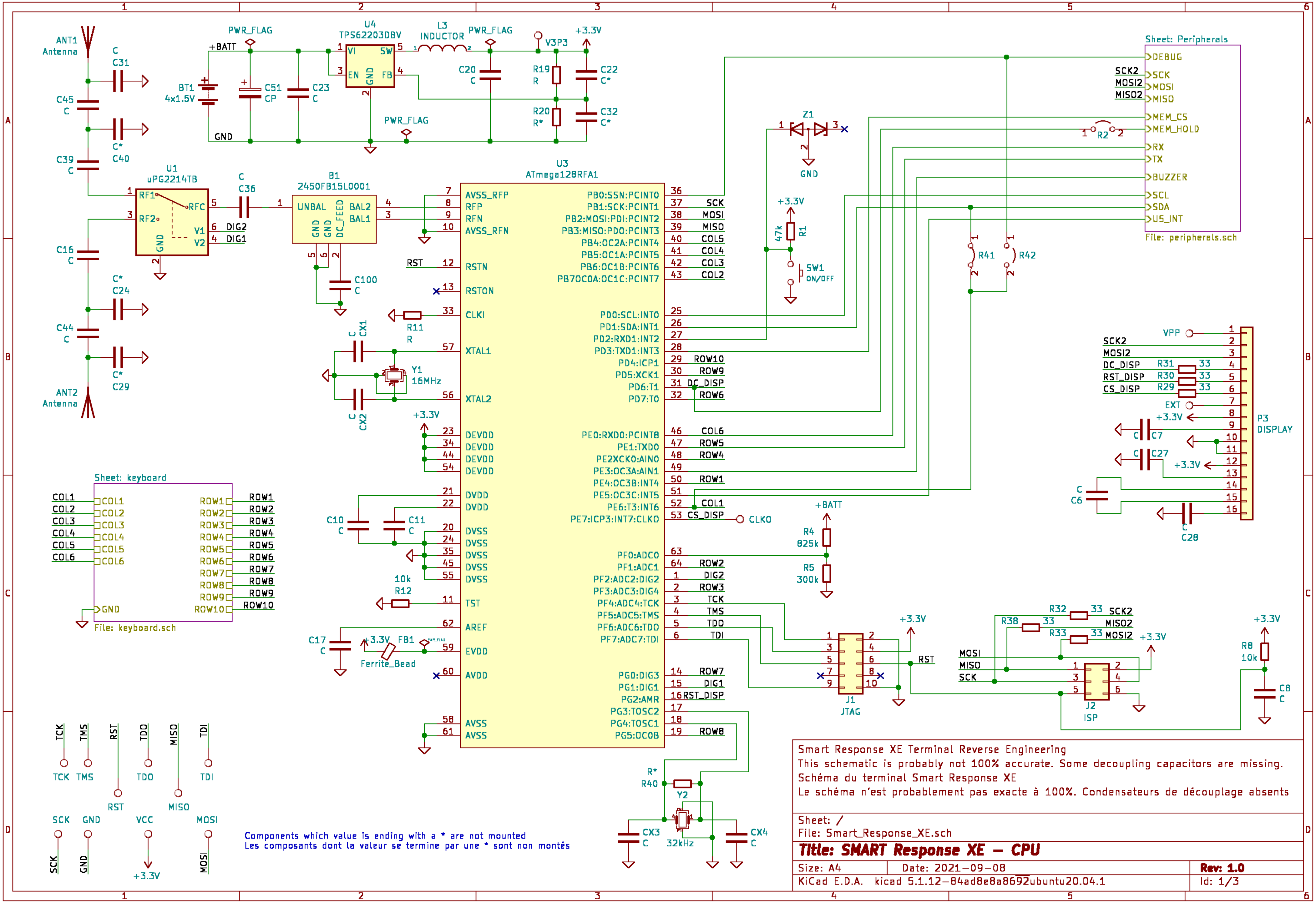
1
2
3
4
5
6
A
B
C
D
ANT1
Antenna
C
C31
C45
C
C*
C40
C39
C
BT1
4x1.5V
+BATT
PWR_FLAG
C51
CP
C23
C
U4
TPS62203DBV
VI
SW
EN
GND
FB
L3
INDUCTOR
PWR_FLAG
V3P3
+3.3V
C20
C
R19
R
C22
C*
R20
R*
C32
C*
GND
PWR_FLAG
U1
uPG2214TB
RF1
RFC
RF2
V1
V2
DIG2
DIG1
C
C36
B1
2450FB15L0001
UNBAL
BAL2
BAL1
GND
GND
DC_FEED
C100
C
C16
C
C*
C24
C44
C
C*
C29
ANT2
Antenna
U3
ATmega128RFA1
AVSS_RFP
RFP
RFN
AVSS_RFN
RSTN
RSTON
CLKI
XTAL1
XTAL2
DEVDD
DVDD
DVSS
TST
AREF
EVDD
AVDD
AVSS
PB0:SSN:PCINT0
PB1:SCK:PCINT1
PB2:MOSI:PDI:PCINT2
PB3:MISO:PDO:PCINT3
PB4:OC2A:PCINT4
PB5:OC1A:PCINT5
PB6:OC1B:PCINT6
PB7OC0A:OC1C:PCINT7
PD0:SCL:INT0
PD1:SDA:INT1
PD2:RXD1:INT2
PD3:TXD1:INT3
PD4:ICP1
PD5:XCK1
PD6:T1
PD7:T0
PE0:RXD0:PCINT8
PE1:TXD0
PE2XCK0:AIN0
PE3:OC3A:AIN1
PE4:OC3B:INT4
PE5:OC3C:INT5
PE6:T3:INT6
PE7:ICP3:INT7:CLKO
PF0:ADC0
PF1:ADC1
PF2:ADC2:DIG2
PF3:ADC3:DIG4
PF4:ADC4:TCK
PF5:ADC5:TMS
PF6:ADC6:TDO
PF7:ADC7:TDI
PG0:DIG3
PG1:DIG1
PG2:AMR
PG3:TOSC2
PG4:TOSC1
PG5:OC0B
SCK
MOSI
MISO
COL5
COL4
COL3
COL2
ROW10
ROW9
DC_DISP
ROW6
COL6
ROW5
ROW4
ROW1
COL1
CS_DISP
CLKO
ROW2
DIG2
ROW3
TCK
TMS
TDO
TDI
ROW7
DIG1
RST_DISP
ROW8
RST
R11
R
CX1
C
Y1
16MHz
CX2
C
+3.3V
C10
C
C11
C
10k
R12
C17
C
+3.3V
FB1
Ferrite_Bead
PWR_FLAG
R*
R40
Y2
32kHz
CX3
C
CX4
C
Z1
GND
+3.3V
47k
R1
SW1
ON/OFF
R41
R42
Sheet: Peripherals
DEBUG
SCK2
SCK
MOSI2
MOSI
MISO2
MISO
MEM_CS
MEM_HOLD
R2
RX
TX
BUZZER
SCL
SDA
US_INT
File: peripherals.sch
VPP
SCK2
MOSI2
DC_DISP
R31
33
RST_DISP
R30
33
CS_DISP
R29
33
EXT
+3.3V
C7
C
C27
C
+3.3V
P3
DISPLAY
C
C6
C
C28
+BATT
R4
825k
R5
300k
Sheet: keyboard
COL1
COL2
COL3
COL4
COL5
COL6
ROW1
ROW2
ROW3
ROW4
ROW5
ROW6
ROW7
ROW8
ROW9
ROW10
GND
File: keyboard.sch
+3.3V
J1
JTAG
RST
R32
33
SCK2
R38
33
MISO2
R33
33
MOSI2
+3.3V
MOSI
MISO
SCK
J2
ISP
+3.3V
R8
10k
C8
C
TCK
TMS
RST
TDO
MISO
TDI
TCK
TMS
TDO
TDI
RST
MISO
SCK
GND
VCC
MOSI
SCK
GND
+3.3V
MOSI

Components which value is ending with a * are not mounted
Les composants dont la valeur se termine par une * sont non montés

Smart Response XE Terminal Reverse Engineering
This schematic is probably not 100% accurate. Some decoupling capacitors are missing.
Schéma du terminal Smart Response XE
Le schéma n'est probablement pas exacte à 100%. Condensateurs de découplage absents

Sheet: /
File: Smart_Response_XE.sch

Title: SMART Response XE - CPU

Size: A4 | Date: 2021-09-08 | **Rev: 1.0**
KiCad E.D.A. kicad 5.1.12-84ad8e8a86~92~ubuntu20.04.1 | Id: 1/3

Enter key is routed but has no dome so there is no physical enter key
La touche enter est routée mais le dome est absent donc il n'y a pas de touche enter physique

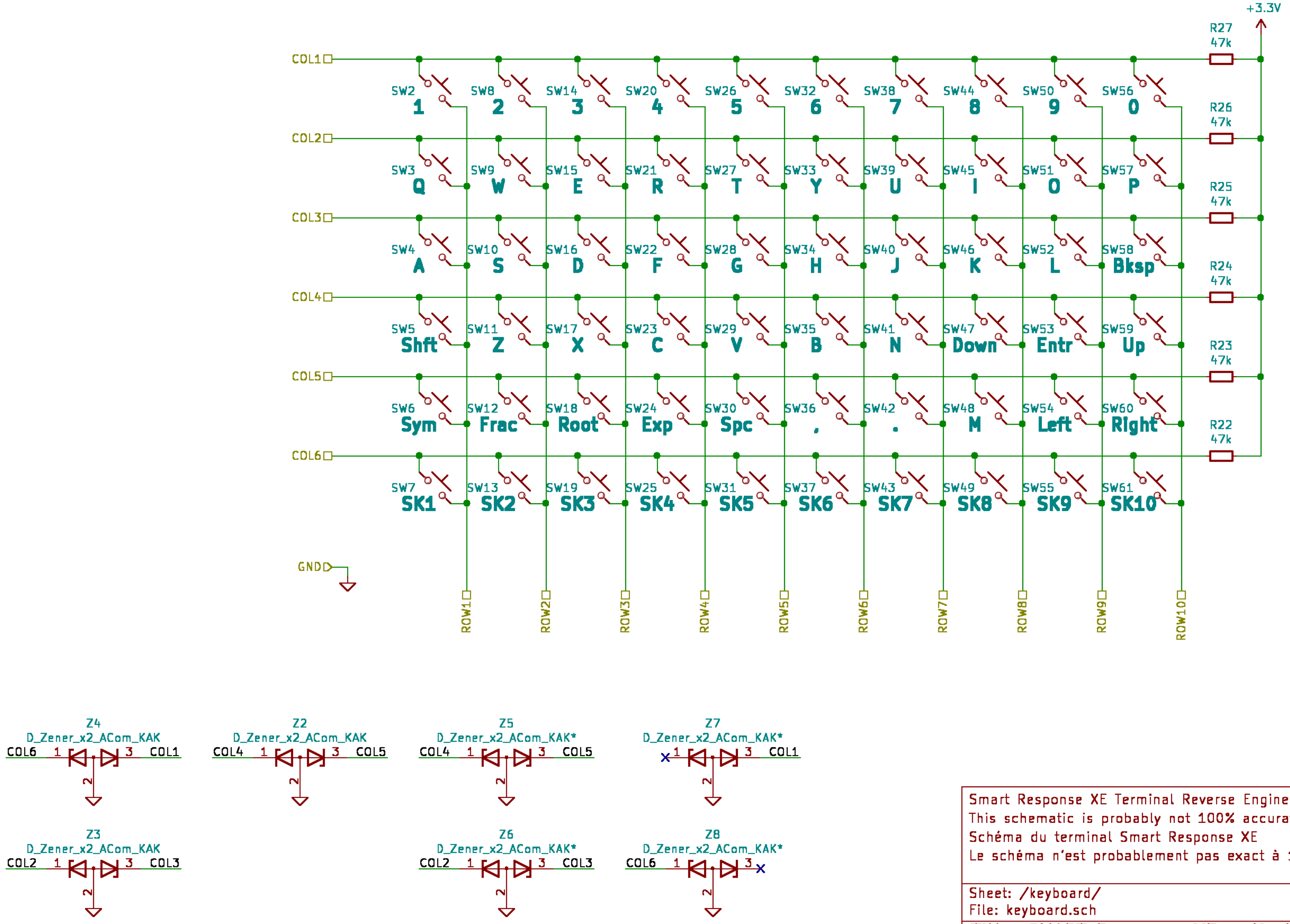
+3.3V
R27 47k
R26 47k
R25 47k
R24 47k
R23 47k
R22 47k
COL1
COL2
COL3
COL4
COL5
COL6
GND
ROW1
ROW2
ROW3
ROW4
ROW5
ROW6
ROW7
ROW8
ROW9
ROW10
SW2 1
SW8 2
SW14 3
SW20 4
SW26 5
SW32 6
SW38 7
SW44 8
SW50 9
SW56 0
SW3 Q
SW9 W
SW15 E
SW21 R
SW27 T
SW33 Y
SW39 U
SW45 I
SW51 O
SW57 P
SW4 A
SW10 S
SW16 D
SW22 F
SW28 G
SW34 H
SW40 J
SW46 K
SW52 L
SW58 Bksp
SW5 Shft
SW11 Z
SW17 X
SW23 C
SW29 V
SW35 B
SW41 N
SW47 Down
SW53 Entr
SW59 Up
SW6 Sym
SW12 Frac
SW18 Root
SW24 Exp
SW30 Spc
SW36 ,
SW42 .
SW48 M
SW54 Left
SW60 Right
SW7 SK1
SW13 SK2
SW19 SK3
SW25 SK4
SW31 SK5
SW37 SK6
SW43 SK7
SW49 SK8
SW55 SK9
SW61 SK10
Z4 D_Zener_x2_ACom_KAK
COL6 1 3 COL1 2
Z2 D_Zener_x2_ACom_KAK
COL4 1 3 COL5 2
Z5 D_Zener_x2_ACom_KAK*
COL4 1 3 COL5 2
Z7 D_Zener_x2_ACom_KAK*
1 3 COL1 2
Z3 D_Zener_x2_ACom_KAK
COL2 1 3 COL3 2
Z6 D_Zener_x2_ACom_KAK*
COL2 1 3 COL3 2
Z8 D_Zener_x2_ACom_KAK*
COL6 1 3 2

Smart Response XE Terminal Reverse Engineering
This schematic is probably not 100% accurate. Decoupling capacitors are missing.
Schéma du terminal Smart Response XE
Le schéma n'est probablement pas exact à 100%. Condensateurs de découplage absents

Sheet: /keyboard/
File: keyboard.sch

Title: SMART Response XE – Keyboard

Size: A4 Date: 2021-09-09 **Rev: 1.0**
KiCad E.D.A. kicad 5.1.12-84ad8e8a8692ubuntu20.04.1 Id: 2/3

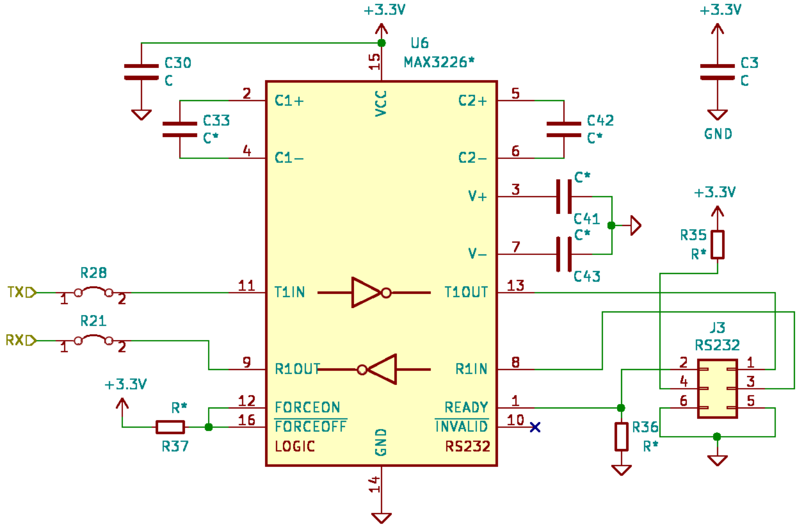
+3.3V
U6
MAX3226*
C30
C
C33
C*
C42
C*
C41
C*
C43
C*
C3
C
GND
C1+
C1−
VCC
C2+
C2−
V+
V−
T1IN
T1OUT
R1OUT
R1IN
FORCEON
FORCEOFF
LOGIC
GND
READY
INVALID
RS232
TXD
RXD
R28
R21
R37
R*
R35
R*
R36
R*
J3
RS232
2
4
6
1
3
5
15
14
11
9
12
16
13
8
10
7

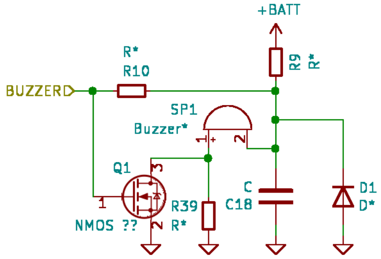
+BATT
BUZZER
R*
R10
R9
R*
SP1
Buzzer*
Q1
NMOS ??
R39
R*
C
C18
D1
D*

BEWARE : On the PCB, drain and source of Q1 are swapped

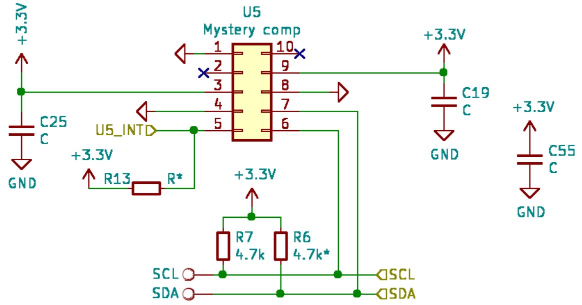
U5
Mystery comp
+3.3V
C25
C
GND
C19
C
C55
C
U5_INT
R13
R*
R7
4.7k
R6
4.7k*
SCL
SDA

Despite missing R6, SDA is still pulled to
+3.3V through R41 (COL1) by about 30k Ohm.

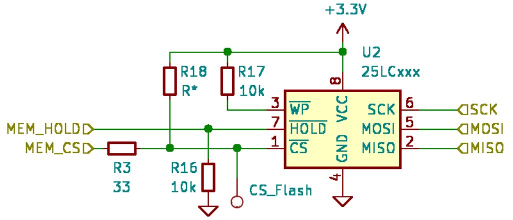
+3.3V
U2
25LCxxx
R18
R*
R17
10k
R3
33
R16
10k
MEM_HOLD
MEM_CS
CS_Flash
WP
HOLD
CS
VCC
GND
SCK
MOSI
MISO

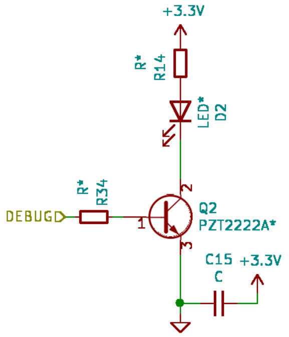
+3.3V
R*
R14
LED*
D2
DEBUG
R*
R34
Q2
PZT2222A*
C15
C
+3.3V

Sheet: /Peripherals/
File: peripherals.sch

Title: SMART Response XE — Peripherals

Size: A4 | Date: 2021-09-09 | **Rev:**
KiCad E.D.A. kicad 5.1.12-84ad8e8a8692ubuntu20.04.1 | Id: 3/3