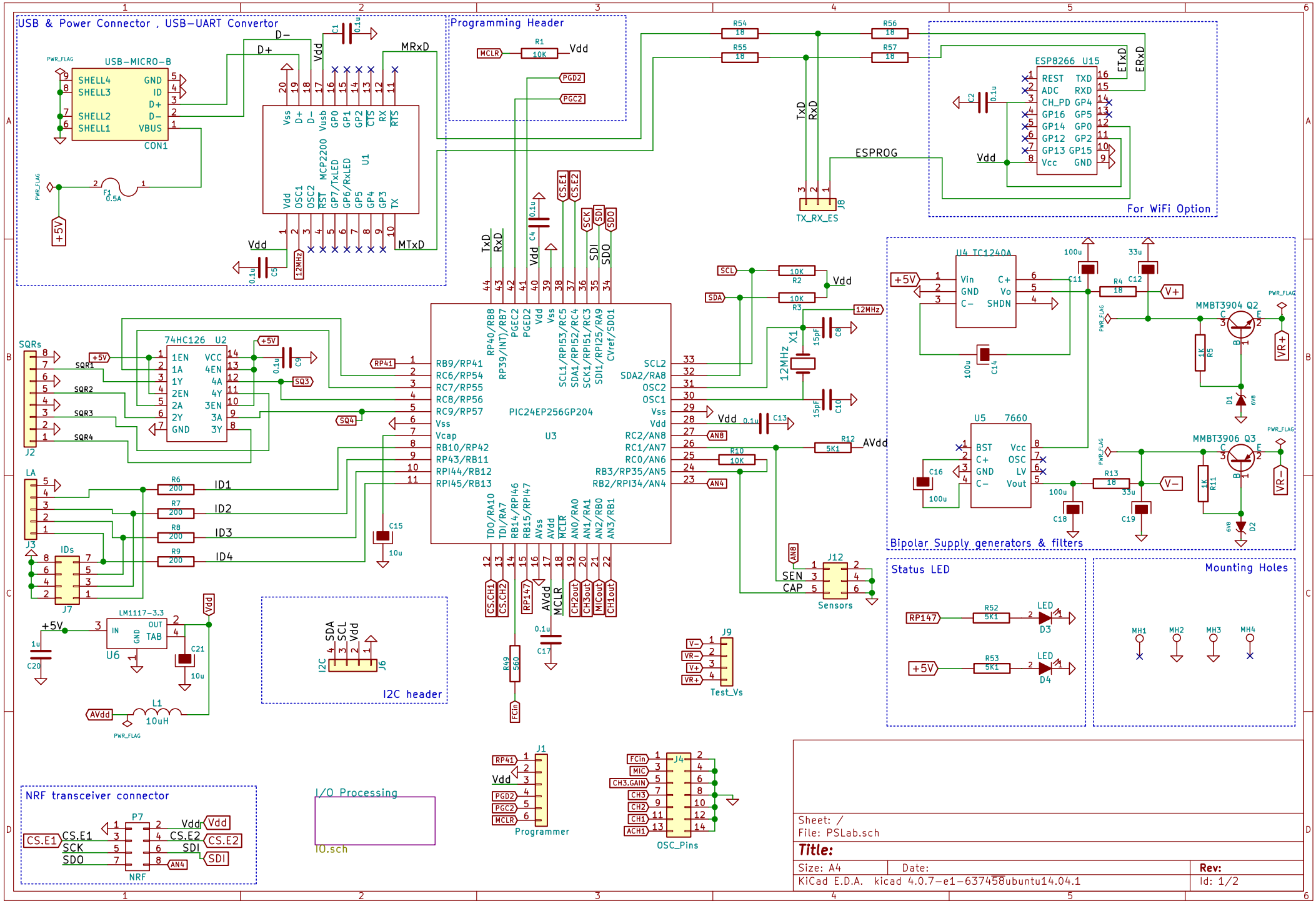
USB & Power Connector , USB-UART Convertor
USB-MICRO-B
CON1
MCP2200
U1
Programming Header
ESP8266 U15
For WiFi Option
TX_RX_ES
ESPROG
PIC24EP256GP204
U3
74HC126 U2
SQRs
J2
LA
J3
IDs
J7
LM1117-3.3
U6
I2C header
J6
NRF transceiver connector
P7
NRF
I/O Processing
IO.sch
J1
Programmer
J4
OSC_Pins
J9
Test_Vs
J12
Sensors
U4 TC1240A
U5 7660
MMBT3904 Q2
MMBT3906 Q3
Bipolar Supply generators & filters
Status LED
Mounting Holes
Sheet: /
File: PSLab.sch
Title:
Size: A4
Date:
Rev:
KiCad E.D.A. kicad 4.0.7-e1-637458ubuntu14.04.1
Id: 1/2

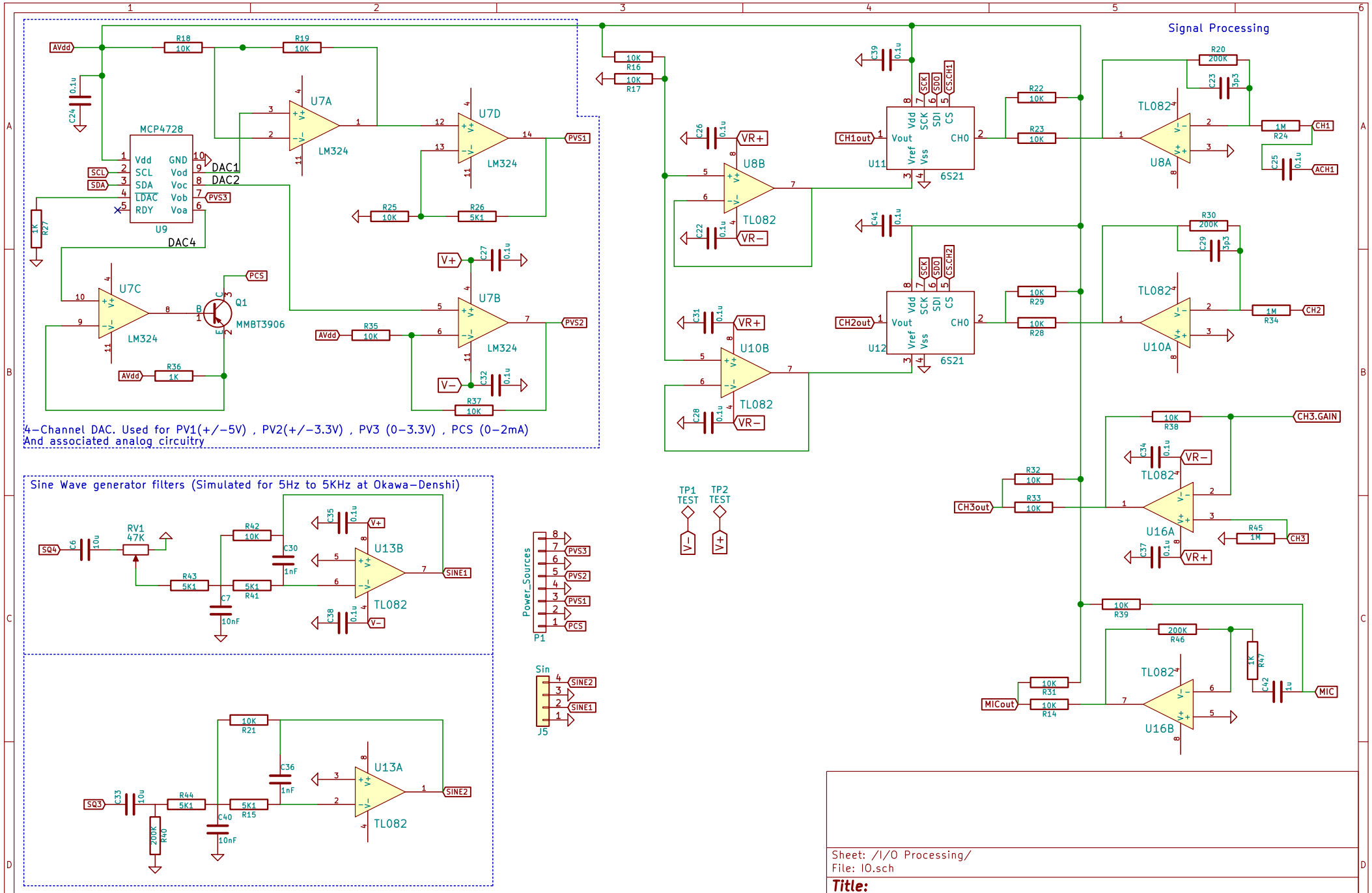
Signal Processing
4-Channel DAC. Used for PV1(+/-5V) , PV2(+/-3.3V) , PV3 (0-3.3V) , PCS (0-2mA)
And associated analog circuitry
Sine Wave generator filters (Simulated for 5Hz to 5KHz at Okawa-Denshi)
MCP4728
U9
DAC1
DAC2
DAC4
U7A
U7B
U7C
U7D
LM324
Q1
MMBT3906
U8A
U8B
U10A
U10B
U13A
U13B
U16A
U16B
TL082
6S21
CH1out
CH2out
CH3out
MICout
CH1
CH2
CH3.GAIN
MIC
ACH1
PVS1
PVS2
PVS3
PCS
SINE1
SINE2
SQ3
SQ4
TP1 TEST
TP2 TEST
Power_Sources
P1
Sin
J5
Sheet: /I/O Processing/
File: IO.sch
Title:
Size: A4
Date:
Rev:
KiCad E.D.A. kicad 4.0.7-e1-637458ubuntu14.04.1
Id: 2/2