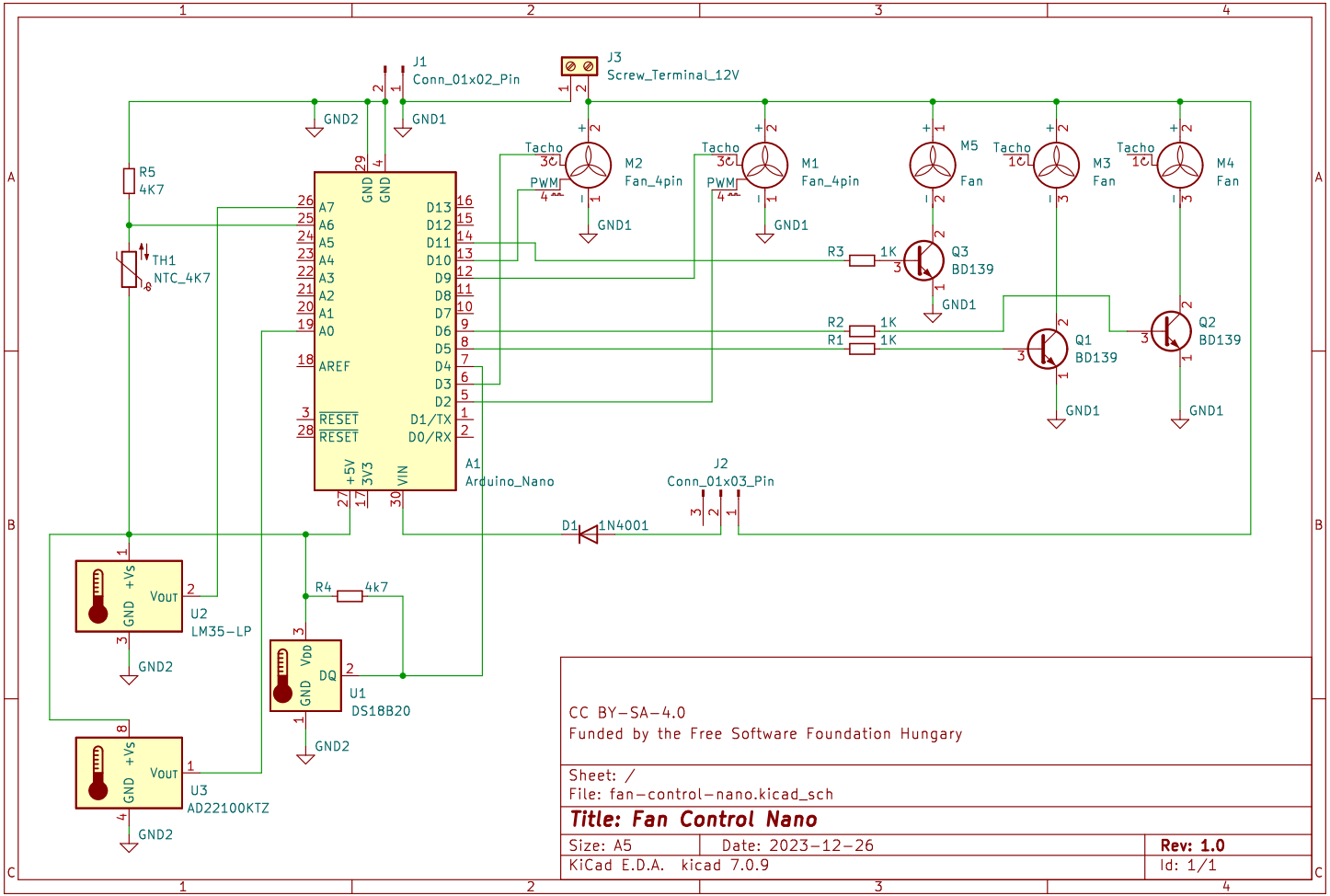

CC BY-SA-4.0
Funded by the Free Software Foundation Hungary

Sheet: /
File: fan-control-nano.kicad_sch

Title: Fan Control Nano

Size: A5	Date: 2023-12-26	Rev: 1.0
KiCad E.D.A. kicad 7.0.9		Id: 1/1