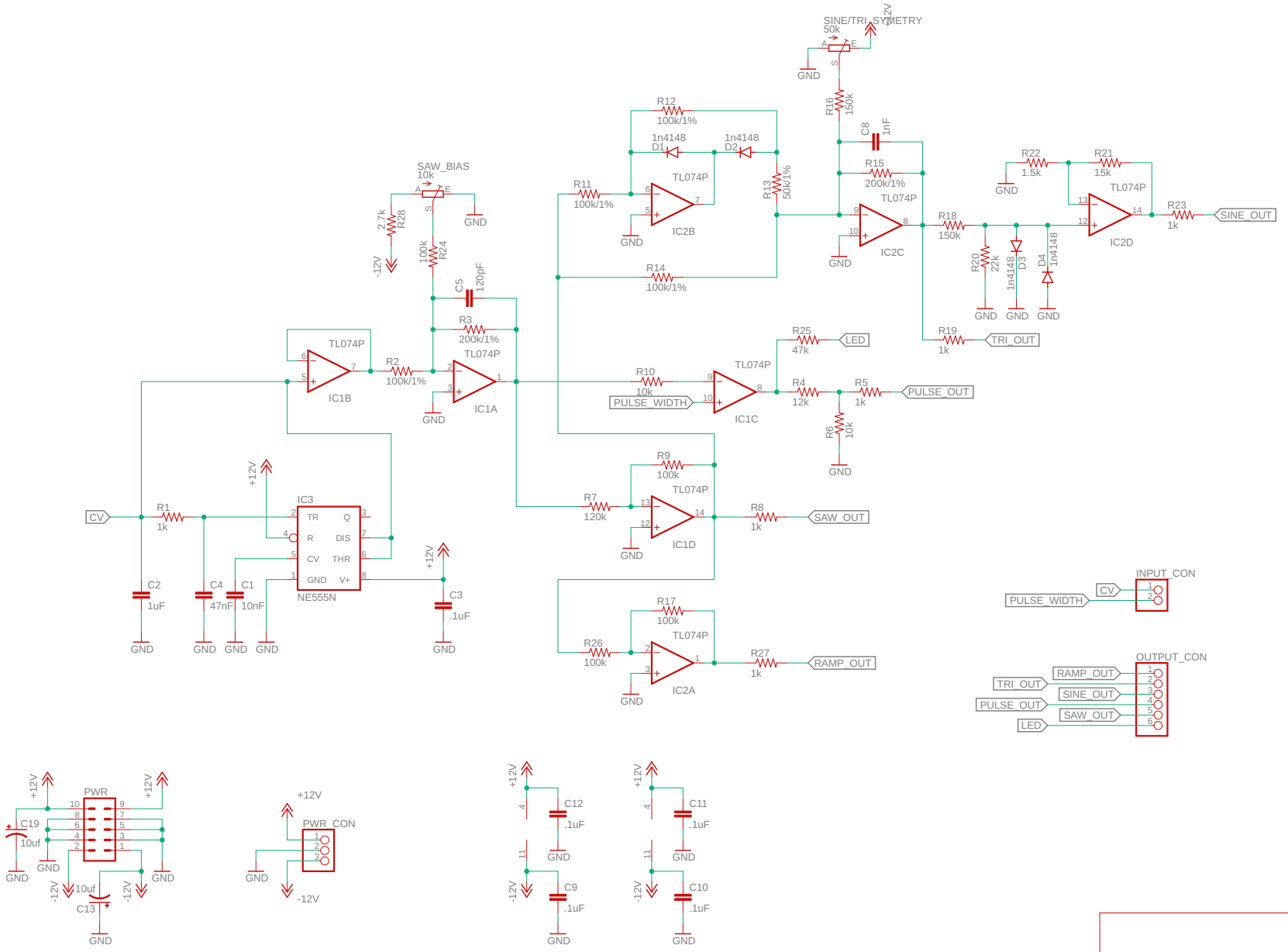

TITLE: mainboard	
Document Number:	REV:
Date: 15-06-2021 12:32	Sheet: 1/1