fasma festival x GHz Labs

1 - Power Up
Insert a 9v battery and set the Power switch to On
WARNING: remove battery before connecting the programming USB port.

2 - Play
Press the play button (Mode LED - Green) the LED will blink in sync with the set tempo. Change the internal tempo by twisting the Tempo knob The interanging from 60 to 240 BPM.
The voice LEDs will also flash when the voice is trigerred.

To mute the playing voices, press the Mute button while in Play mode (Mode LED - YELLOW) The voice LEDS will turn on if the voice is not muted, press one of the voice pads to disable or enable that voice.

Warning: Line out, is only designed for line level signals and not high loads like headphones, please use the Headphone output.

3 - Making a beat
Press the Record button (Mode LED - RED)
To turn on the metronome press and hold the record button for a seccond while in Play Mode. To disable the metronome exit record mode.

To record a sequence, simply tap out the beats on each of the corresponding voice pads. The sequence will be automatically quantized.

To erase a sequence, press and hold the Erase button, tap the voice pad and the for that voice will be erased.

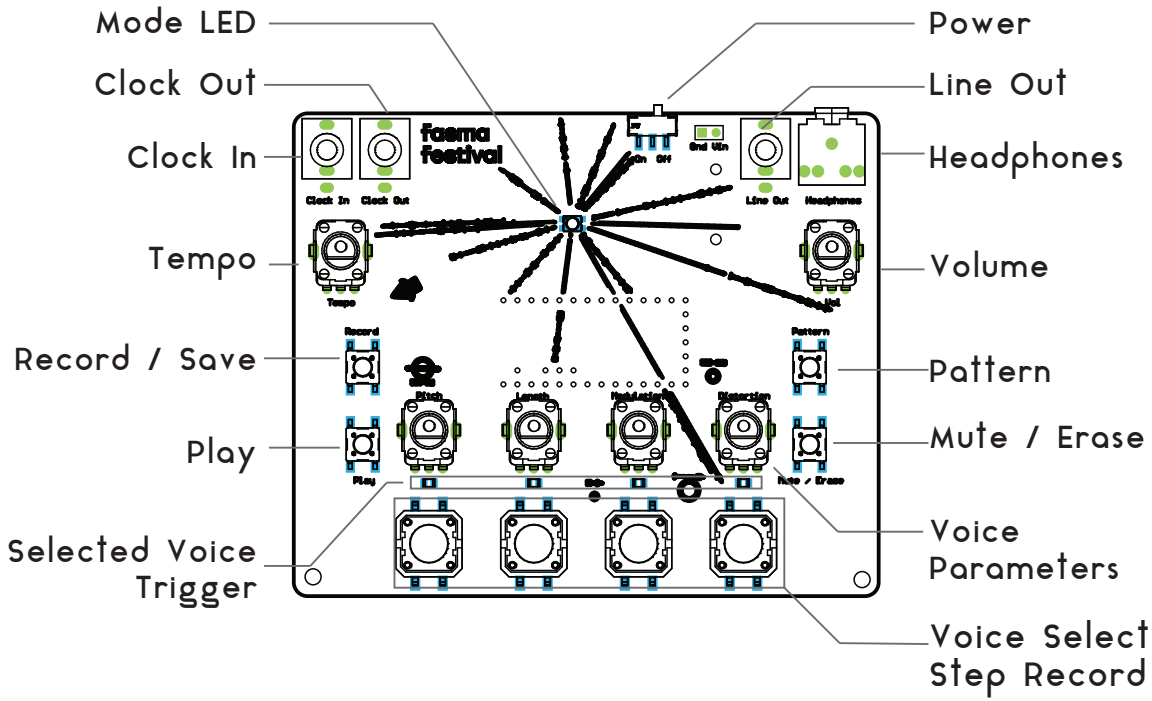

4 - Tweak the sound
The selected voice (idicated by a solid Voice LED) can be controlled by the four parameter knobs. Pitch, length, pitch modulation and distortion.
The pitch modulation is an attenuverter type control over the pitch envelope. In middle position there is no pitch modulation, turning the knob clockwise past the middle, gradually applies more positive modulation. and turning the control anticlockwise below the middle position applies negative modulation.

To record parameter knob movements, Press and hold the Record button, while tweaking the parameter knobs. The offsets from the original position will be recorded as automation and will follow the new knob positions proportionately. To completely randomize the automation press end hold Erase and then press Record, this will randomize all four parameters for the current voice.

The parameter controls are disabled every time the voice is changed and are enabled again only when the control "catches" the actual parameter value. To change voices without recording a trigger make sure you are out of Record mode.

5 - Patterns
Patterns is a collection of sequences from all voices. To change patterns, press and hold the Pattern button (Mode LED - Blue).
Blinking led indicates active pattern. Press one of the voice pads to change to that pattern.

To copy a patter press and hold down the pattern you want to coppy (it will start blinking faster), and then tap the pattern slot where you want to paste.

To clear a pattern, press the Erase button while in Pattern mode, and it will erase the currently selected pattern.

It is possible to store the patterns permanently into the devices memory that can be recalled after turning off. Simply press the Record / Save button while in Pattern modeand the currently selected pattern will be permanently stored. The Mode LED will flash once Red to indicate that the pattern was saved.

To enter pattern chaining mode, press Play while holding down record (Mode LED - Cyan). Then press the pattern pads in the sequence that you want them to follow once they finish playing. They will transition automatically and loop. It is possible to chain up to 8 patterns. To exit pattern chaining mode release and press again the pattern button and then the pattern pad that you wish to stay on.

6 - Sync
To sync the drum machine to any external hardware you can use the Clock in or Clockout connectors.
Whenever there is an external clock signal present, the internal tempo will be disabled. To enable the internal clock again, unplug the clock injack, then exit and enter play mode.
The clock out connector duplicates the external clock in when present, otherwise it is sinchronized wiht the internal tempo and can be the Master Clock source.

www.tomashg.com