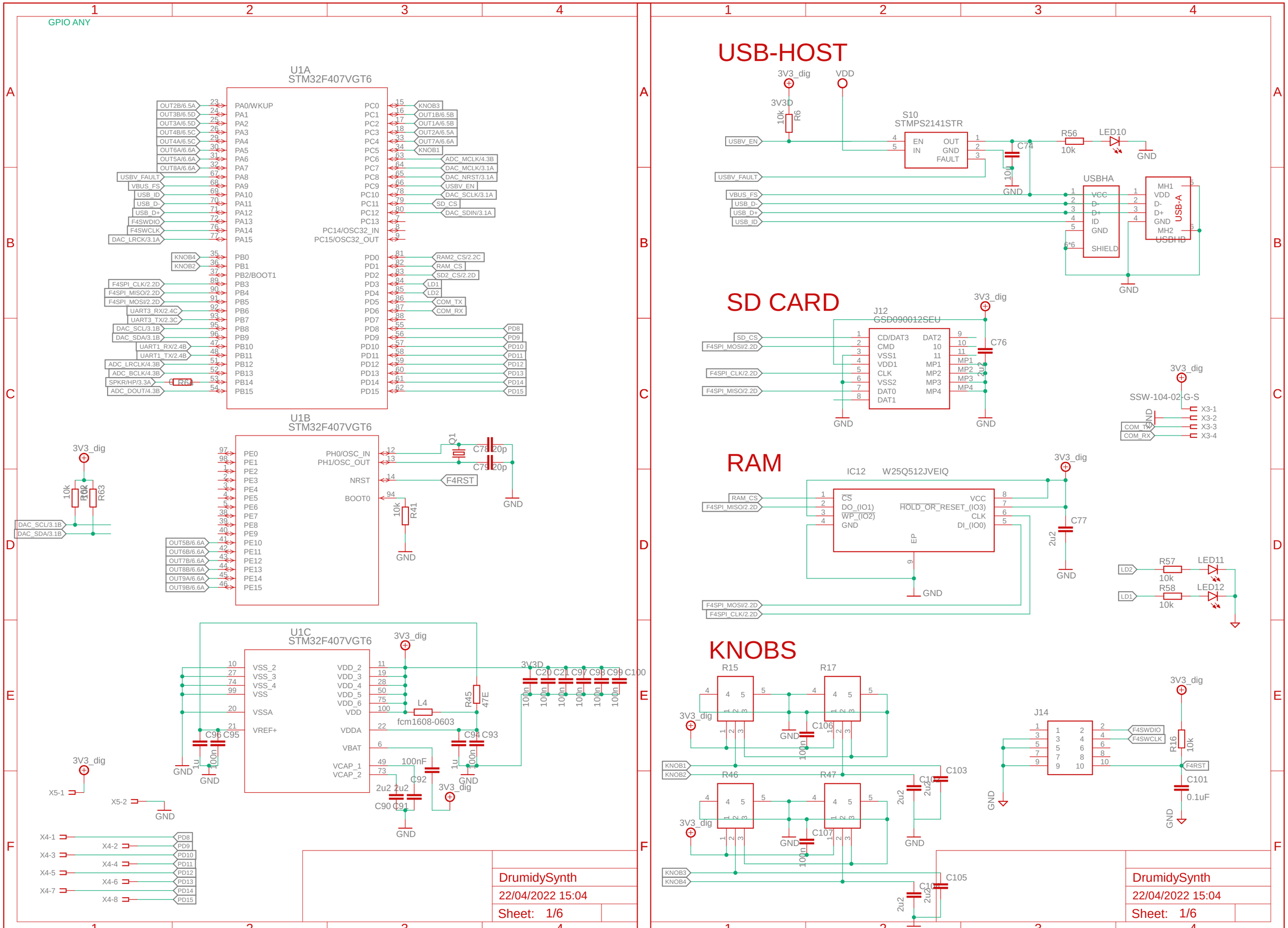
GPIO ANY
U1A
STM32F407VGT6
U1B
STM32F407VGT6
U1C
STM32F407VGT6
USB-HOST
S10
STMPS2141STR
USBHA
USB-A
SD CARD
J12
GSD090012SEU
RAM
IC12 W25Q512JVEIQ
KNOBS
J14
SSW-104-02-G-S
3V3_dig
VDD
3V3D
GND
DrumidySynth
22/04/2022 15:04
Sheet: 1/6

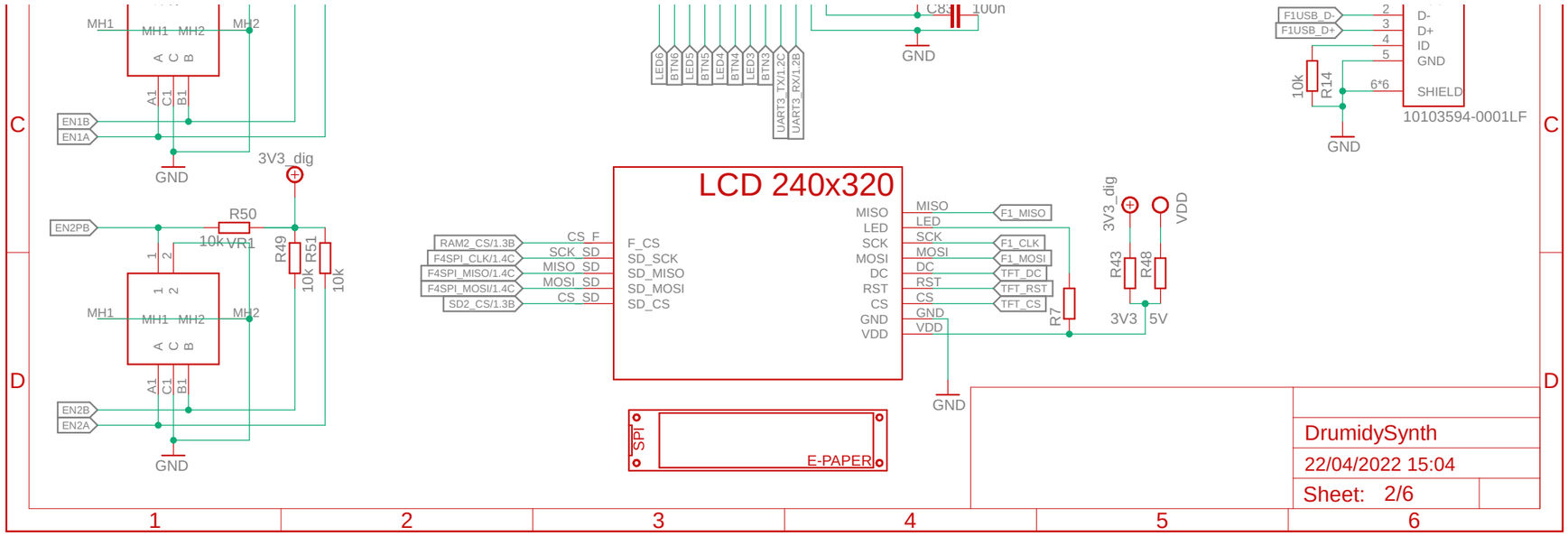
MH1
MH2
A
C
B
A1
C1
B1
EN1B
EN1A
GND
3V3_dig
EN2PB
R50
10k
VR1
R49
10k
R51
10k
EN2B
EN2A
LED6
BTN6
LED5
BTN5
LED4
BTN4
LED3
BTN3
UART3_TX/1.2C
UART3_RX/1.2B
C83
100n
F1USB_D-
F1USB_D+
D-
D+
ID
GND
SHIELD
6*6
R14
10103594-0001LF
LCD 240x320
RAM2_CS/1.3B
F4SPI_CLK/1.4C
F4SPI_MISO/1.4C
F4SPI_MOSI/1.4C
SD2_CS/1.3B
CS_F
SCK_SD
MISO_SD
MOSI_SD
CS_SD
F_CS
SD_SCK
SD_MISO
SD_MOSI
SD_CS
MISO
LED
SCK
MOSI
DC
RST
CS
GND
VDD
F1_MISO
F1_CLK
F1_MOSI
TFT_DC
TFT_RST
TFT_CS
R7
R43
R48
3V3
5V
VDD
SPI
E-PAPER
DrumidySynth
22/04/2022 15:04
Sheet: 2/6
1
2
3
4
5
6
C
D

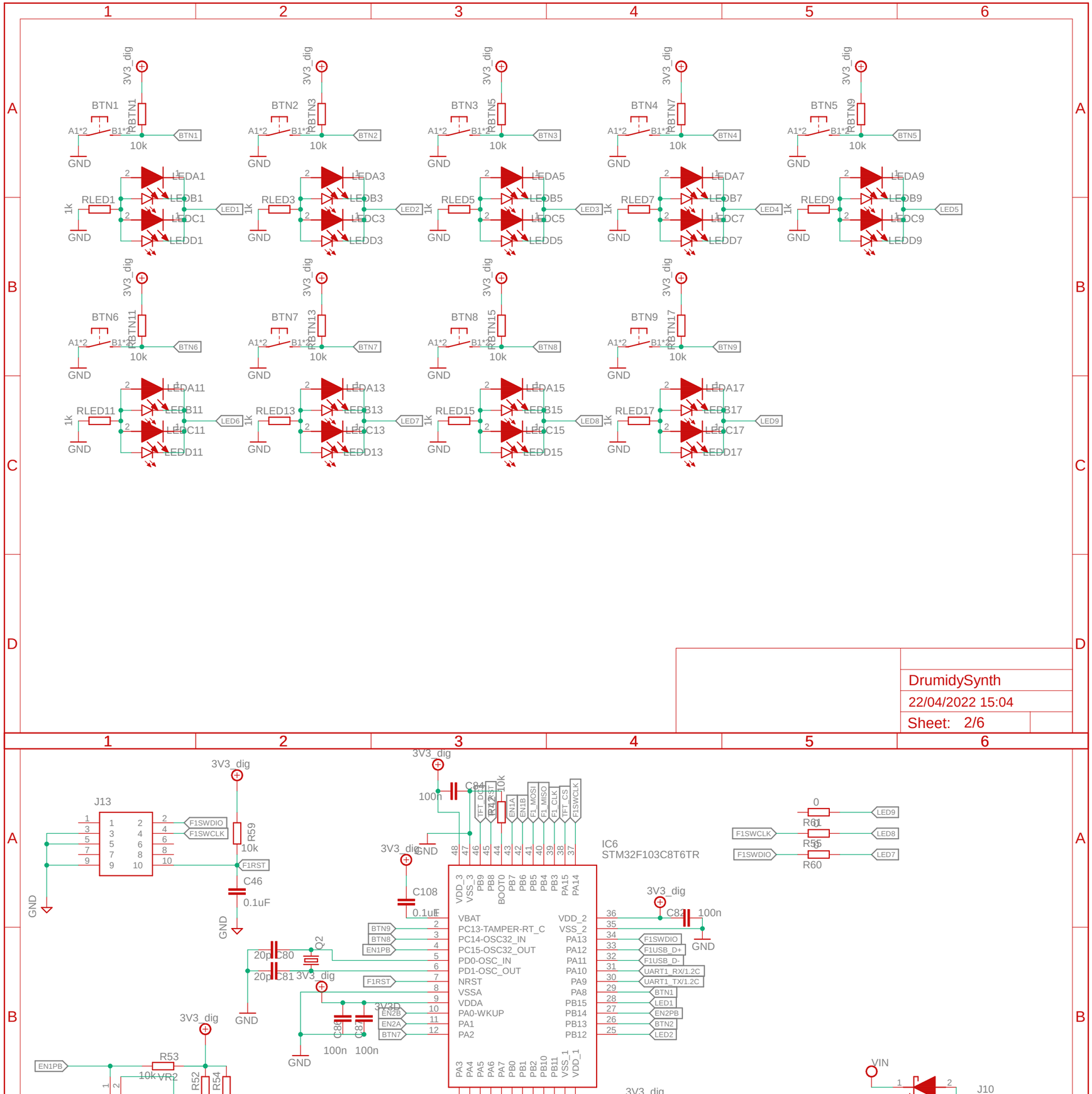

DrumidySynth

22/04/2022 15:04

Sheet: 2/6

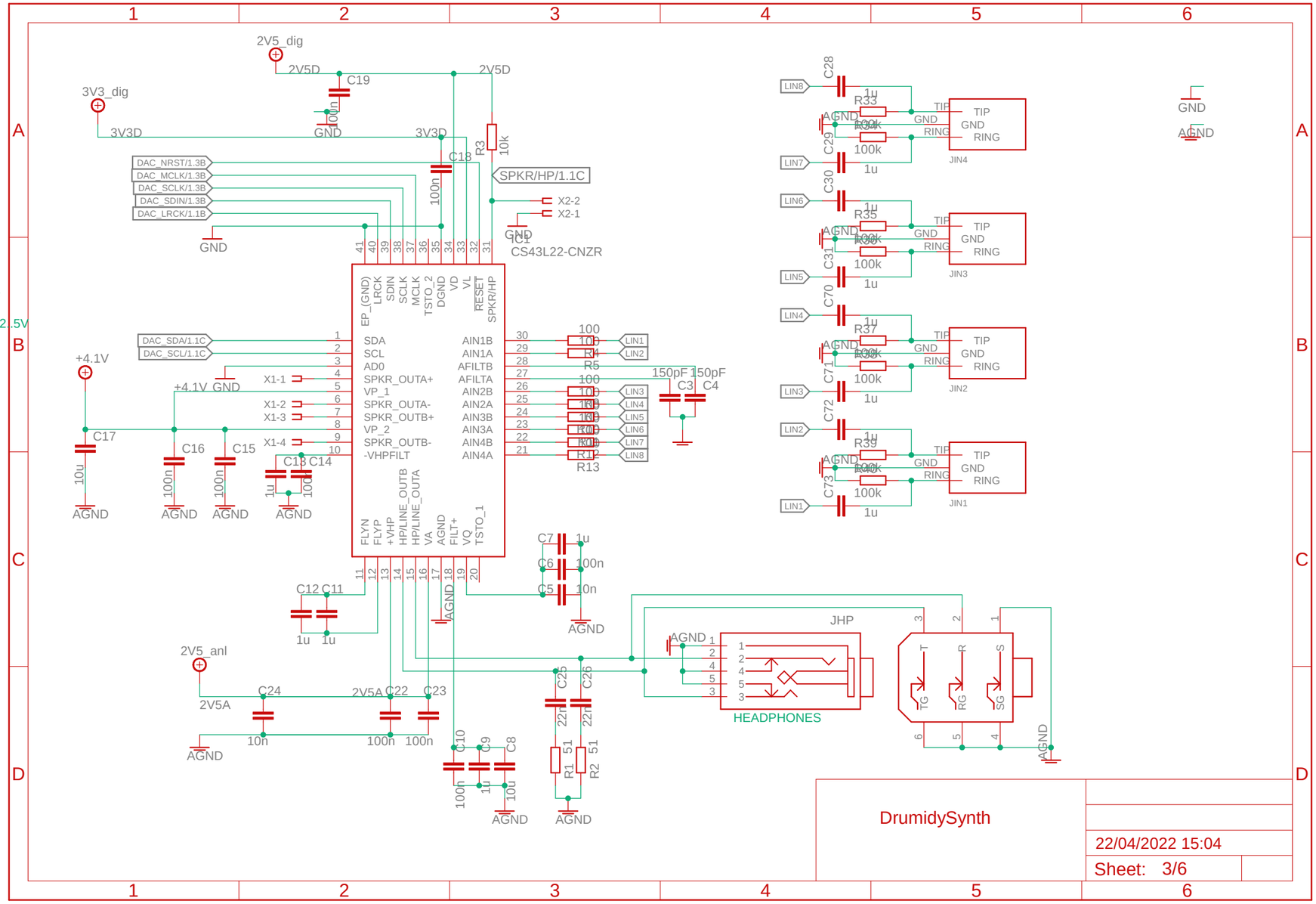

DrumidySynth

22/04/2022 15:04

Sheet: 3/6

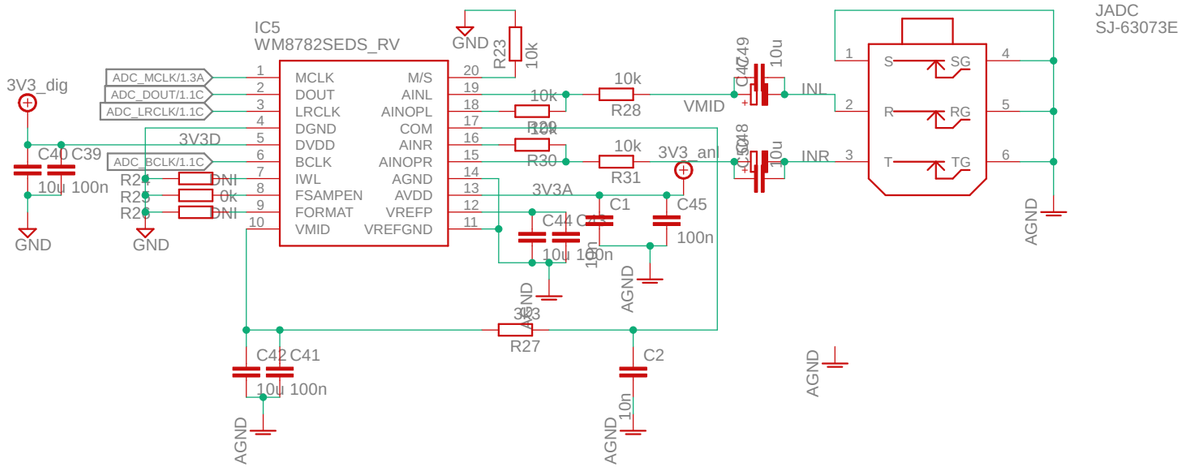

DrumidySynth

22/04/2022 15:04

Sheet: 4/6

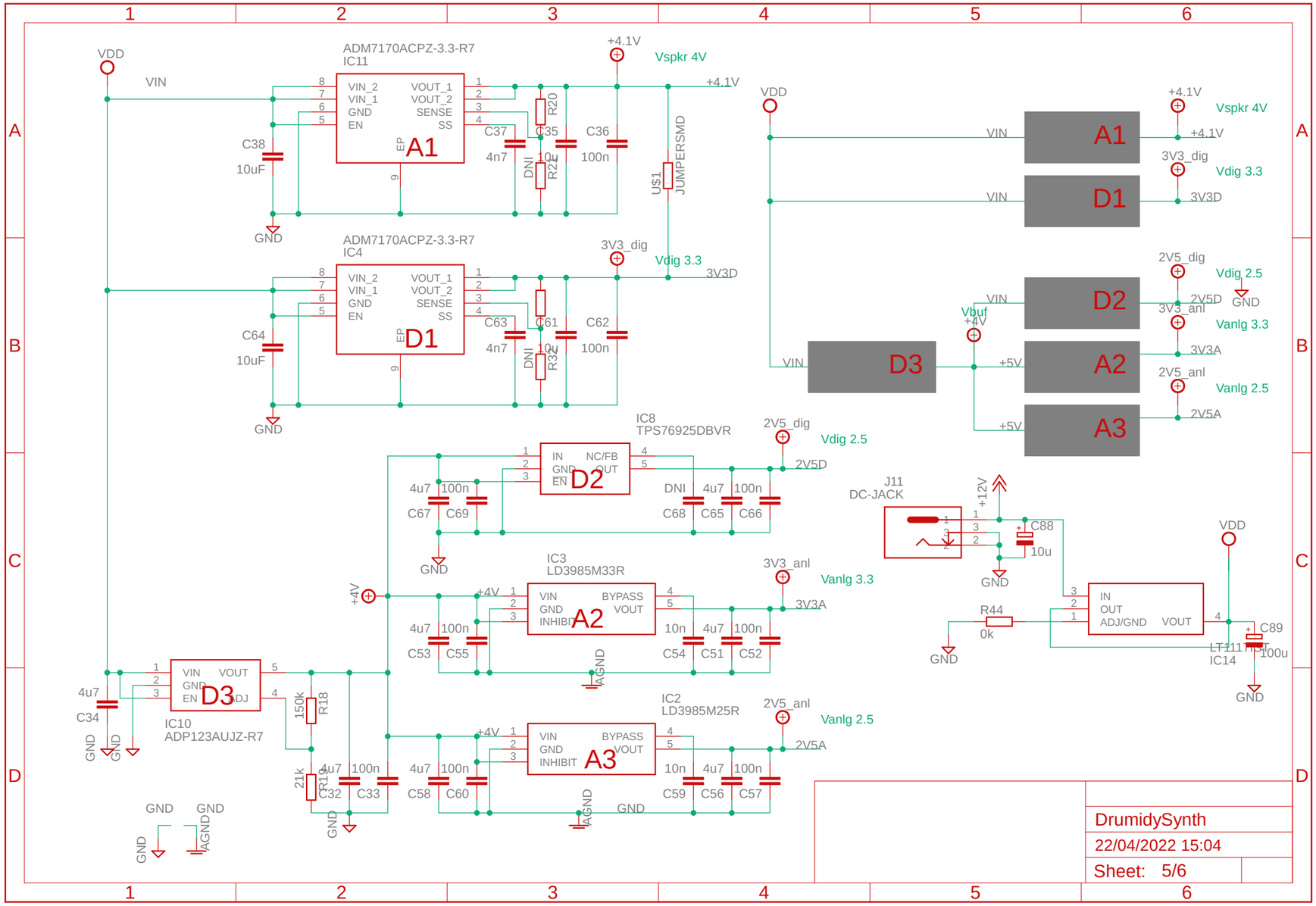

4.1V digital:
-
4.1V analog:
- Speaker(DAC)
3.3V digital:
- MCU
- ADC
- DAC
3.3V analog:
- ADC
2.5V digital:
- DAC
2.5V analog:
- DAC

DrumidySynth

22/04/2022 15:04

Sheet: 5/6

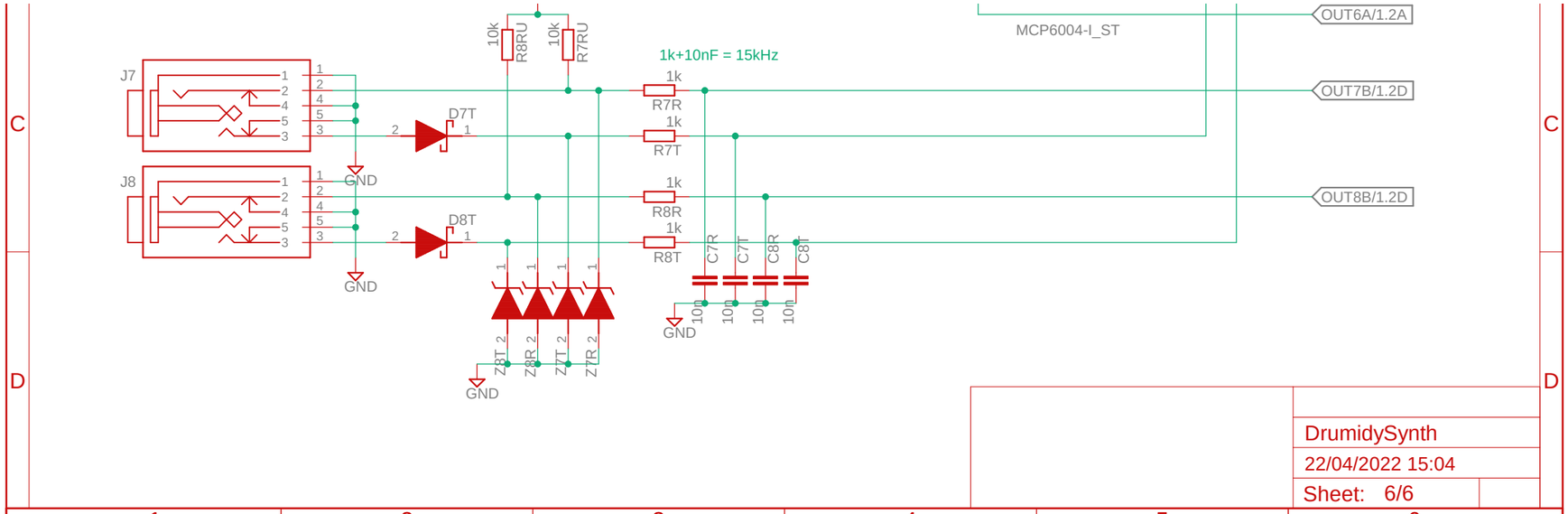

DrumidySynth
22/04/2022 15:04
Sheet: 6/6

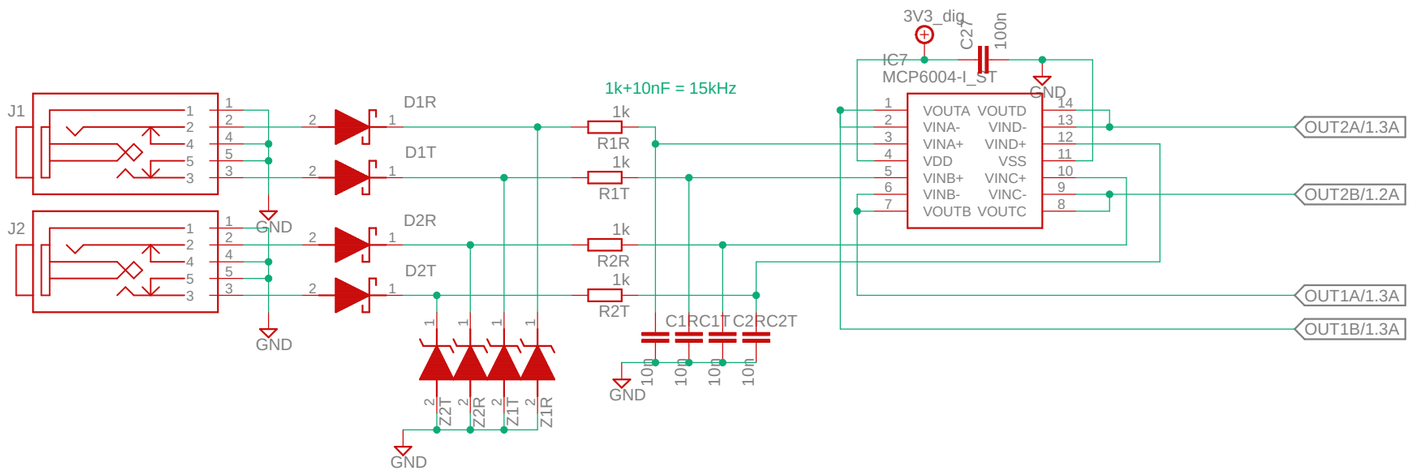

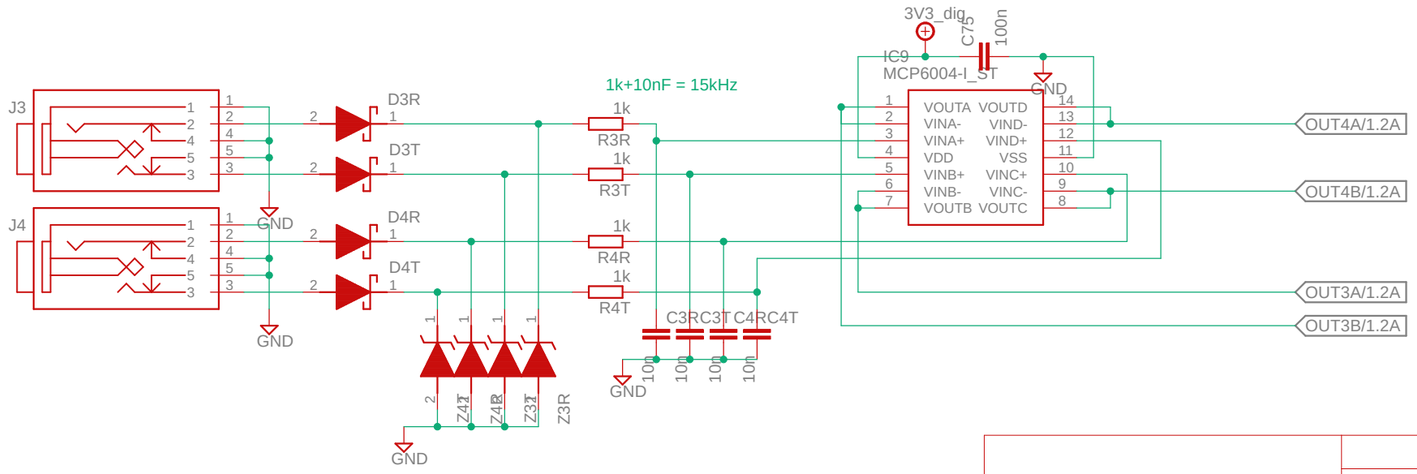

DrumidySynth
22/04/2022 15:04
Sheet: 6/6

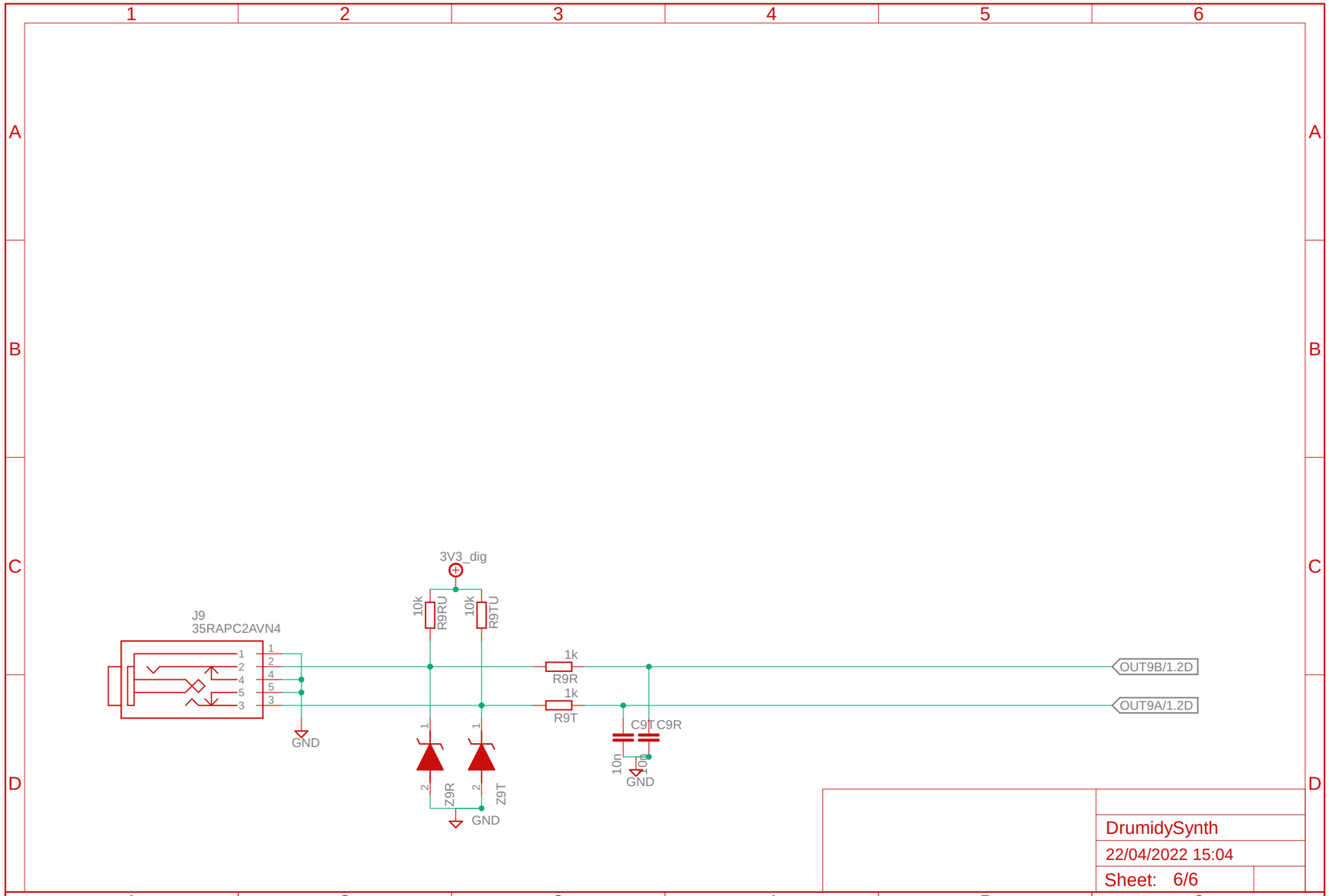
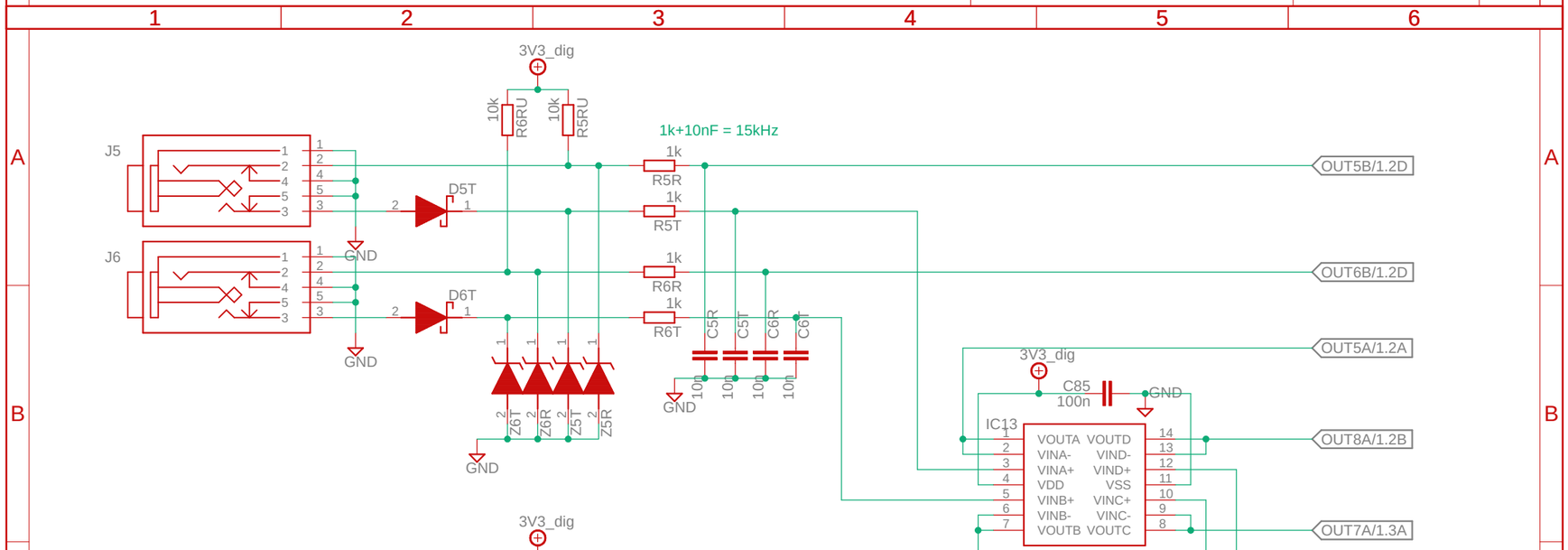
DrumidySynth
22/04/2022 15:04
Sheet: 6/6