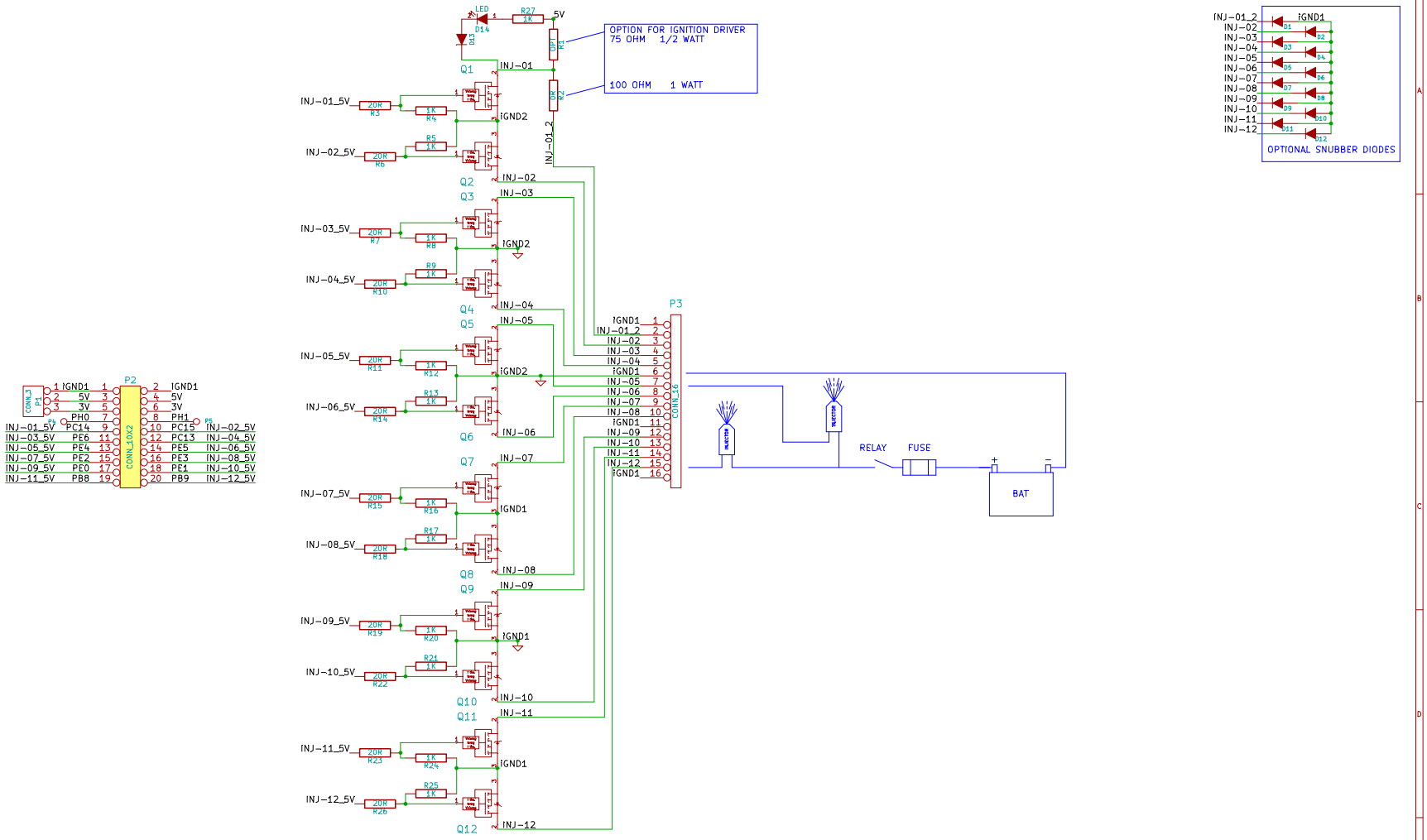

MISC NOTES

THE GENERAL SYSTEM LAYOUT IS SHOWN IN BLUE. THIS IS NOT THE SUGGESTED SYSTEM WIRING, IT DOES SHOW THE GENERAL OVERALL CIRCUIT LAYOUT TOPOLOGY.

THE PCB WIRING IS SHOWN IN RED, GREEN WITH A BLUE BUS.

Screw terminals 1760500000

Screw connector PCB http://octopart.com/39522-1007-molex-655409
Screw connector harness http://octopart.com/partsearch#search/requestData&q=39520-0007

http://code.google.com/p/daecu/		
File: inj_12ch.sch		
Sheet: /		
Title: 12 Channel Injector		
Size: B	Date: 26 Jan 2014	Rev: A-1
KiCad E.D.A. eeschema (2013-07-07 BZR 4022)-stable		Id: 1/1