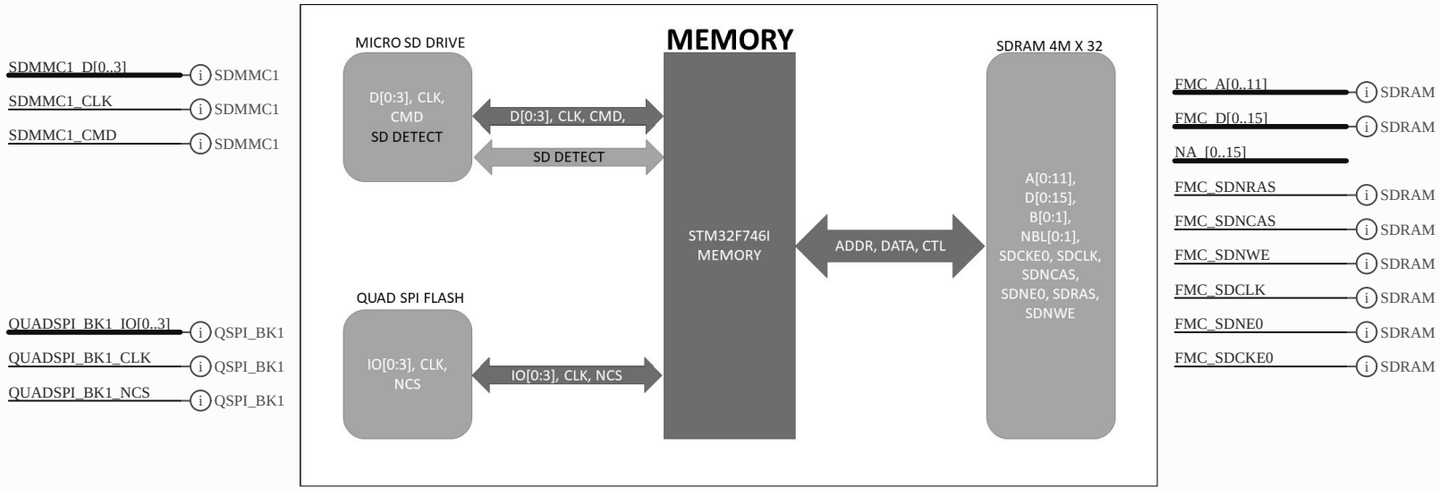

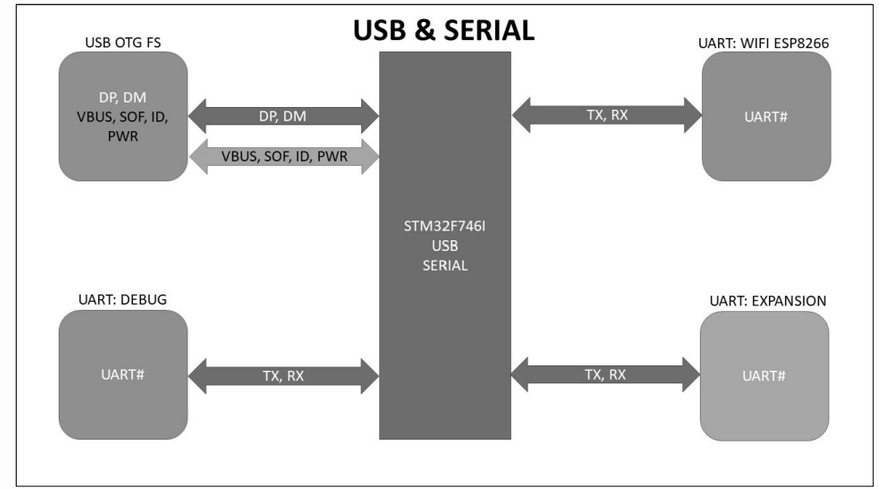

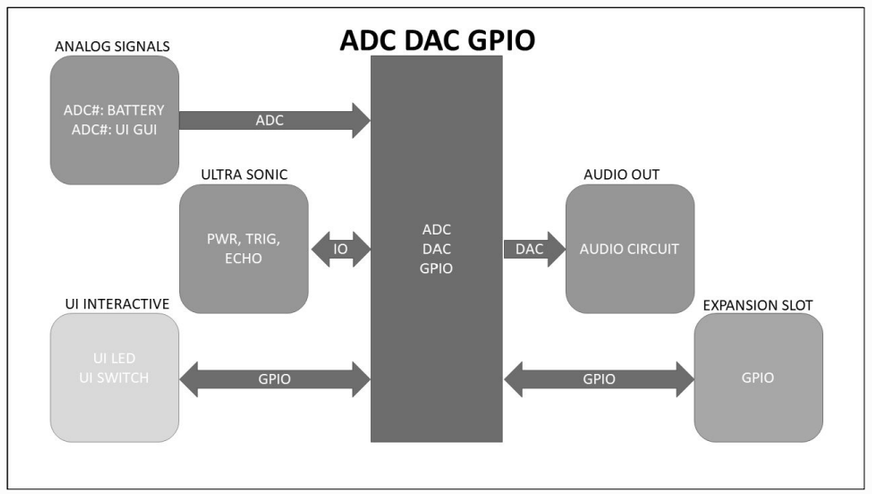

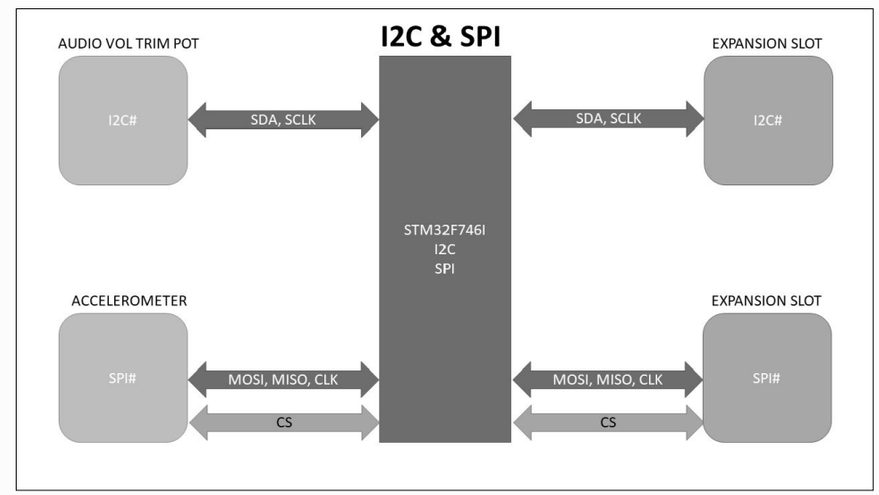

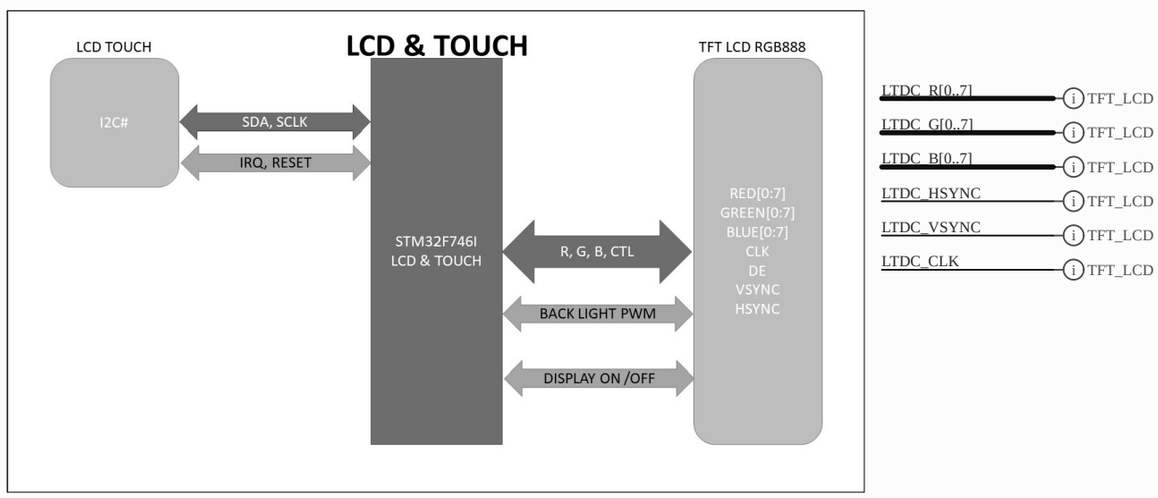

Title *IMR Technology Demonstrator*			*IMR Engineering* *3621 Gin Way* *Snellville, GA 30039* *USA*
Size: B	Number: IMR_004	Revision: 2	
Date: 4/17/2021	Engr: H. Collector	Sheet 1 of 10	
File: TitleBlock.SchDoc			

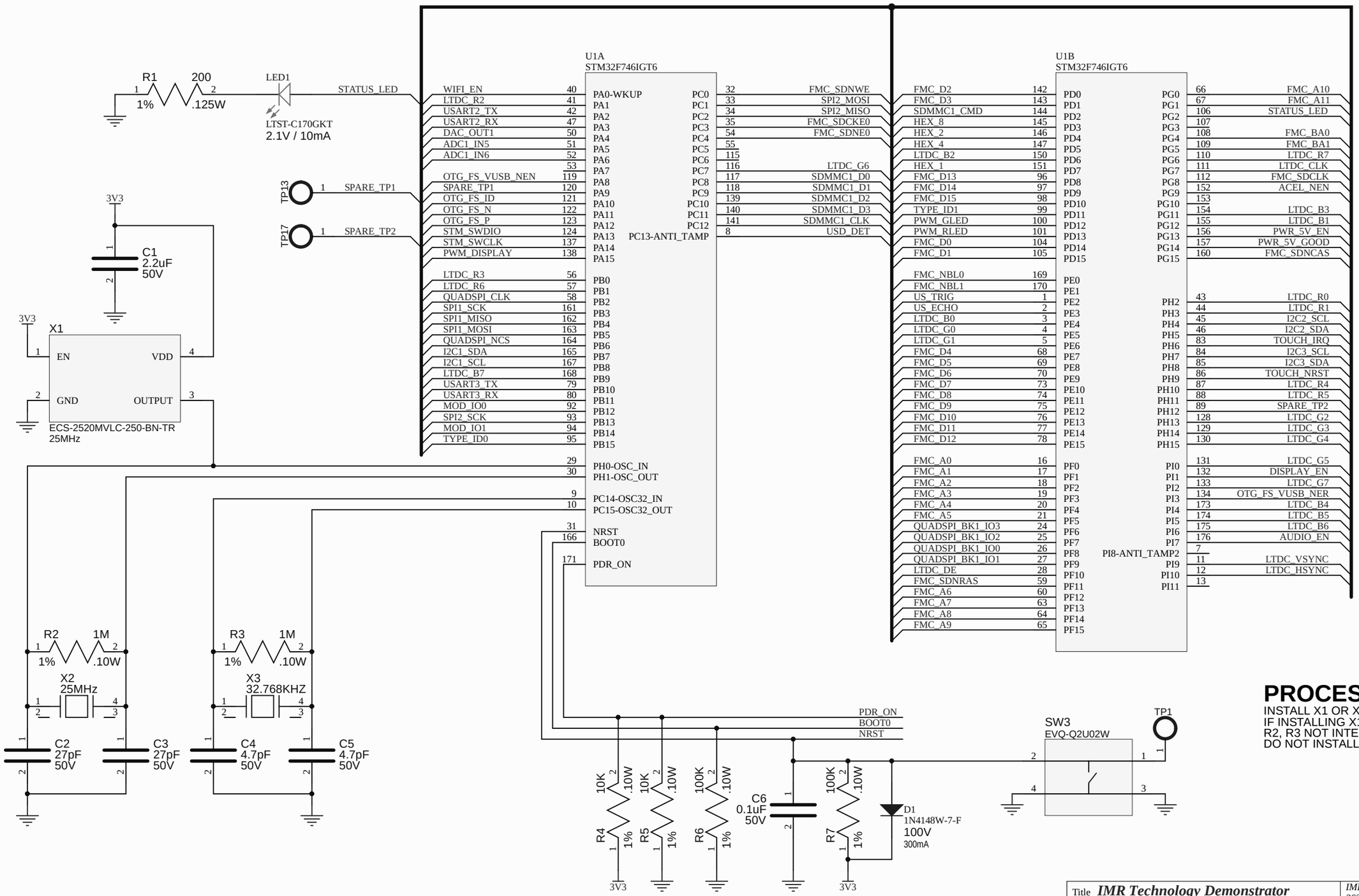

PROCESSOR NOTES:

INSTALL X1 OR X2
IF INSTALLING X1 DO NOT INSTALL X2, R2, C2 C3
R2, R3 NOT INTENDED FOR NORMAL OPERATION
DO NOT INSTALL R5

Title *IMR Technology Demonstrator*			*IMR Engineering* *3621 Gin Way* *Snellville, GA 30039* *USA*
Size: B	Number: IMR_004	Revision: 2	
Date: *	Engr: H. Collector	Sheet 2 of 10	
File: MainController.SchDoc			

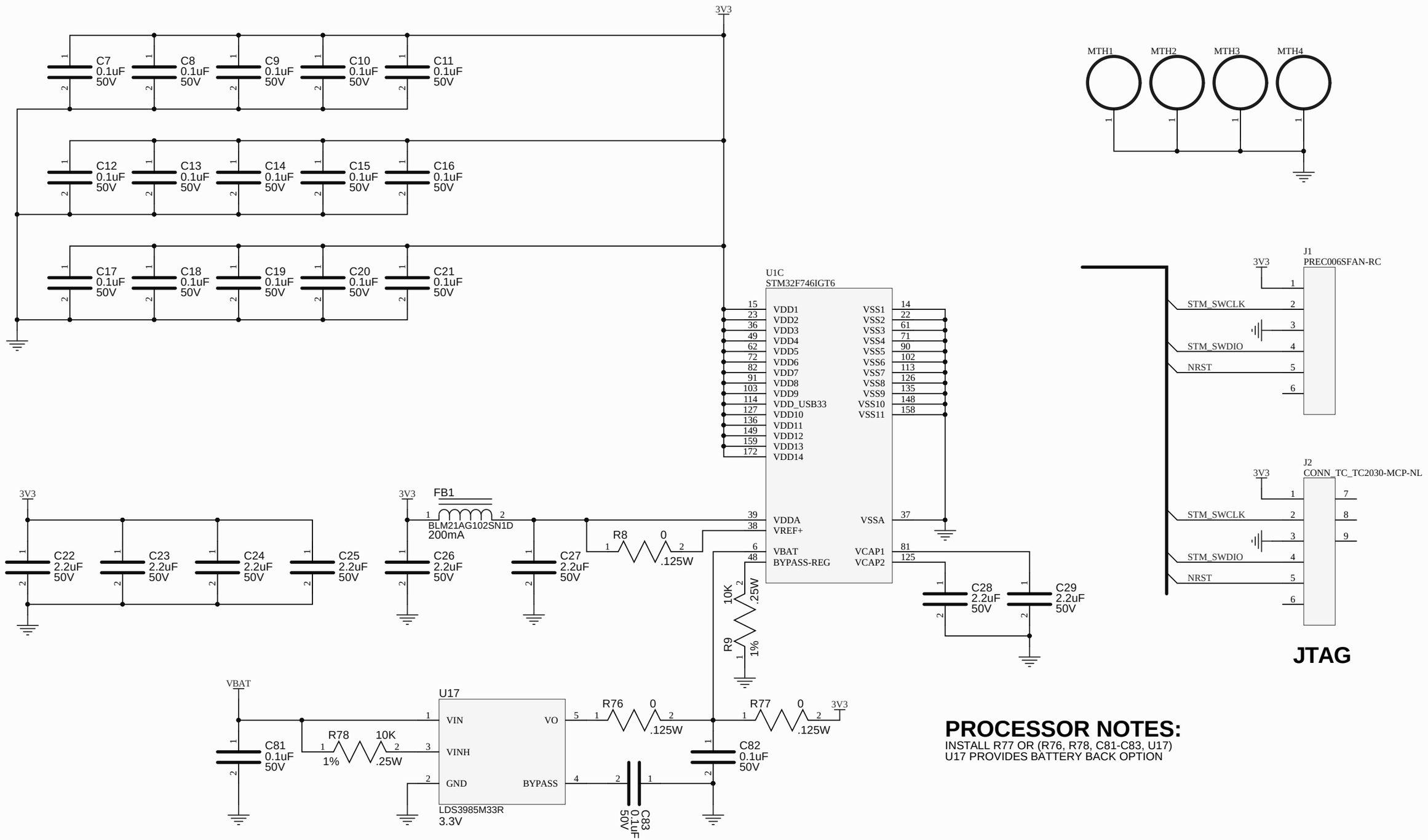

PROCESSOR NOTES:

INSTALL R77 OR (R76, R78, C81-C83, U17)
U17 PROVIDES BATTERY BACK OPTION

Title *IMR Technology Demonstrator*			*IMR Engineering* *3621 Gin Way* *Snellville, GA 30039* *USA*
Size: B	Number: IMR_004	Revision: 2	
Date: *	Engr: H. Collector	Sheet 3 of 10	
File: MainControllerPower.SchDoc			

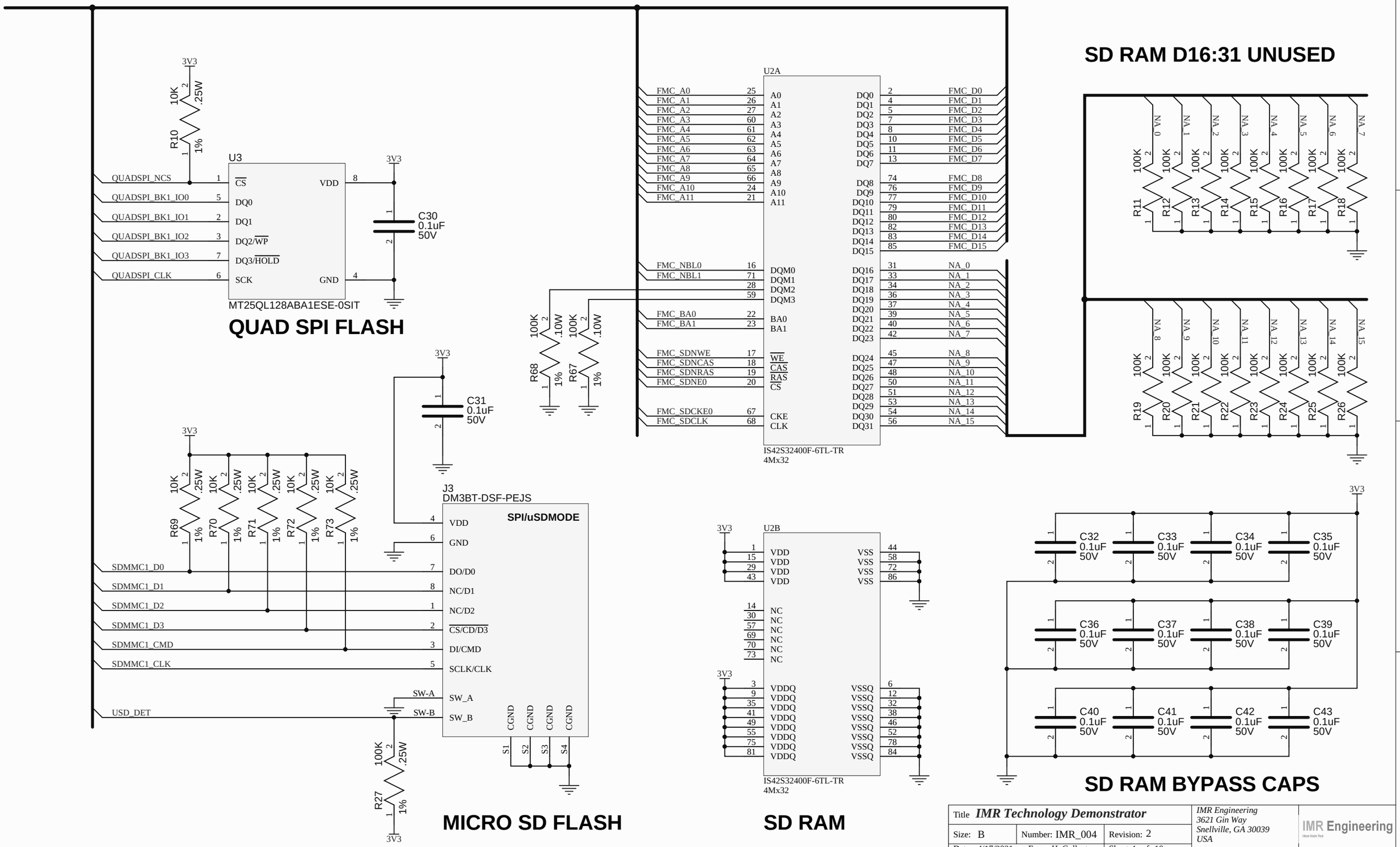

Title *IMR Technology Demonstrator*			*IMR Engineering* *3621 Gin Way* *Snellville, GA 30039* *USA*
Size: B	Number: IMR_004	Revision: 2	
Date: 4/17/2021	Engr: H. Collector	Sheet 4 of 10	
File: SystemMemory.SchDoc			

IMR Engineering
Ideas Made Real

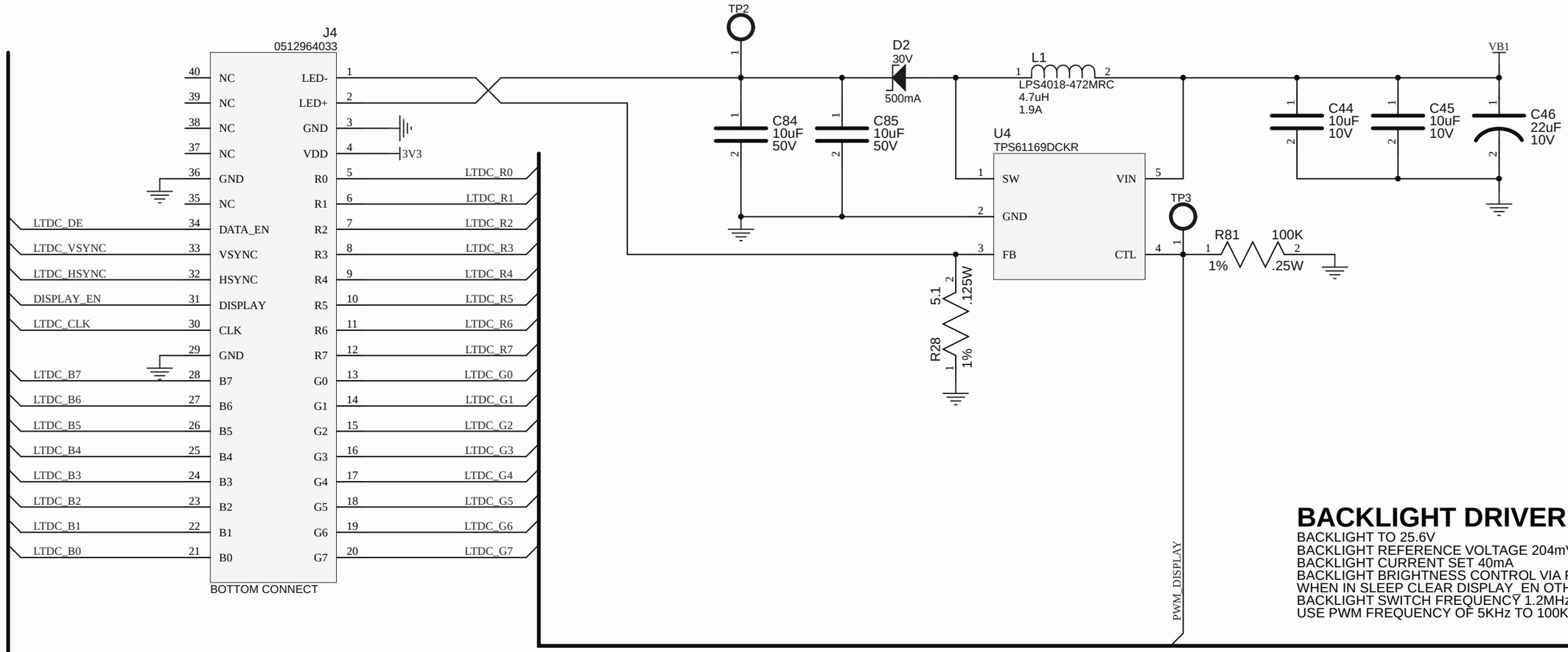

BACKLIGHT DRIVER:

BACKLIGHT TO 25.6V
BACKLIGHT REFERENCE VOLTAGE 204mV
BACKLIGHT CURRENT SET 40mA
BACKLIGHT BRIGHTNESS CONTROL VIA PWM_DISPLAY
WHEN IN SLEEP CLEAR DISPLAY_EN OTHERWISE SET
BACKLIGHT SWITCH FREQUENCY 1.2MHz
USE PWM FREQUENCY OF 5KHz TO 100KHz

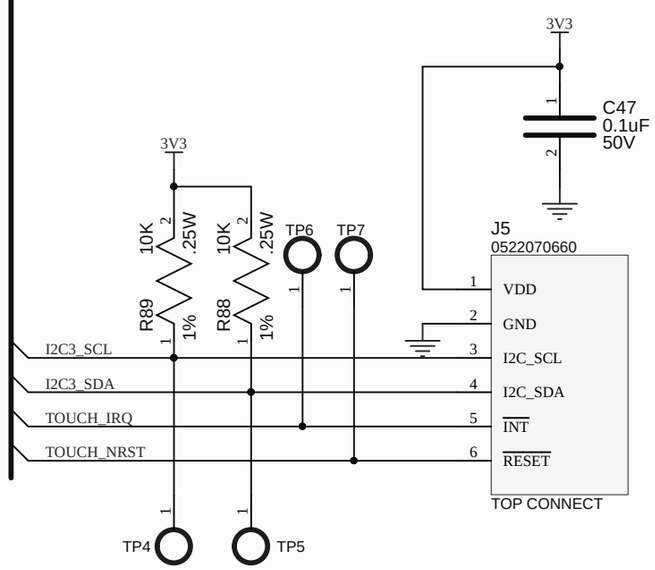

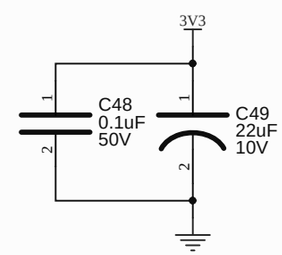

DISPLAY BYPASS

DISP1

NHD-4.3-480272EF-ASXV#-CTP
480x272 24 Bit

Title *IMR Technology Demonstrator*			*IMR Engineering* *3621 Gin Way* *Snellville, GA 30039* *USA*
Size: B	Number: IMR_004	Revision: 2	
Date: 4/17/2021	Engr: H. Collector	Sheet 5 of 10	
File: LCD_TouchBackLight.SchDoc			

OTG USB FS:

OTG_FS_VUSB CANNOT BE DRIVE BY 5V IF CONTROLLER OFF - CIRCUIT PROTECTS
PULL DOWN ON USB D+, D- LIKELY UNNECESSARY
IF TECH DEMO SELF-POWERED VBUS SENSING MANDATORY
IF TECH DEMO BUS POWERED VBUS SENSING NOT MANDATORY
INSTALL R33 OR L4

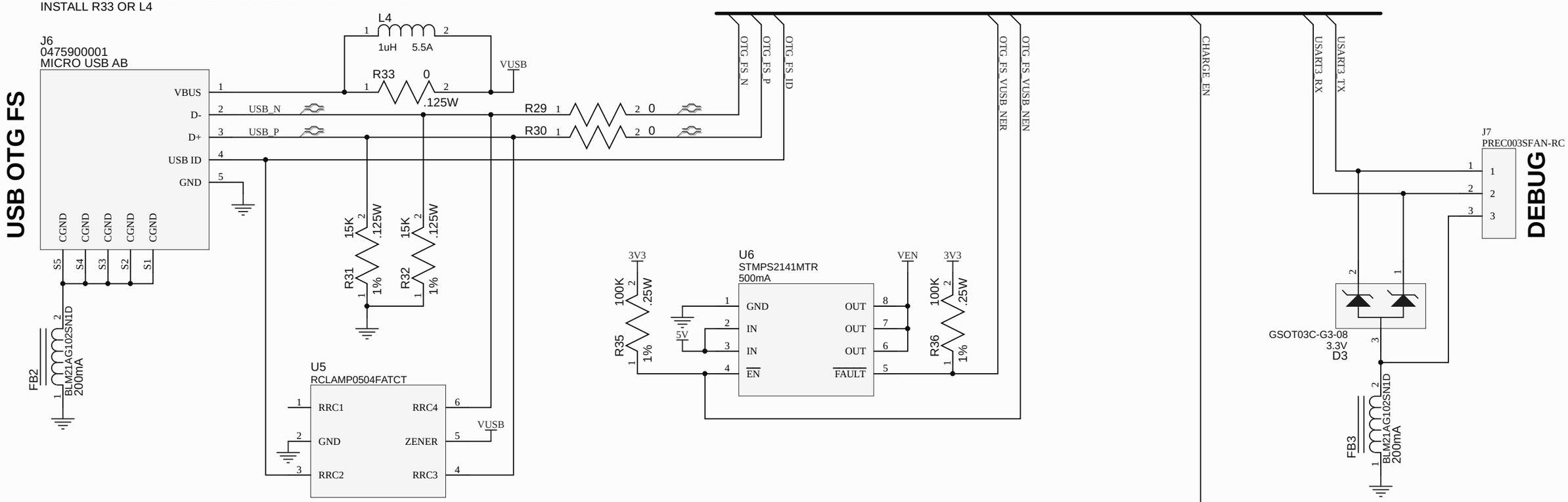

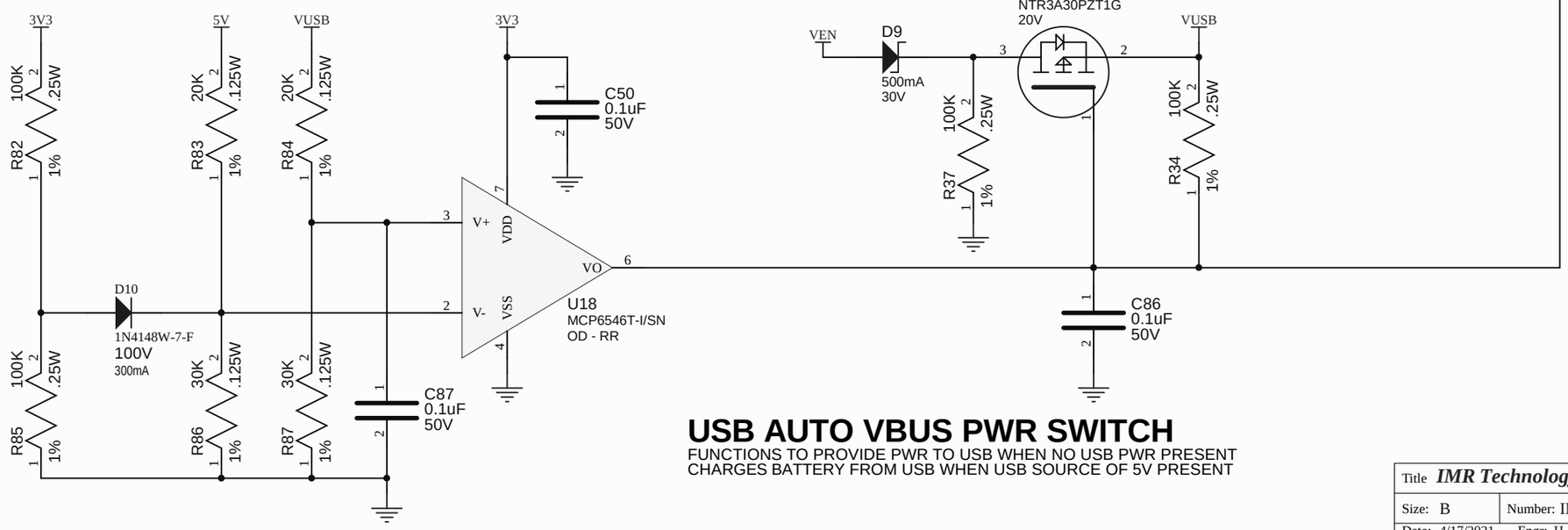

USB AUTO VBUS PWR SWITCH

FUNCTIONS TO PROVIDE PWR TO USB WHEN NO USB PWR PRESENT
CHARGES BATTERY FROM USB WHEN USB SOURCE OF 5V PRESENT

Title *IMR Technology Demonstrator*			*IMR Engineering* *3621 Gin Way* *Snellville, GA 30039* *USA*
Size: B	Number: IMR_004	Revision: 2	
Date: 4/17/2021	Engr: H. Collector	Sheet 6 of 10	
File: SerialInterface.SchDoc			

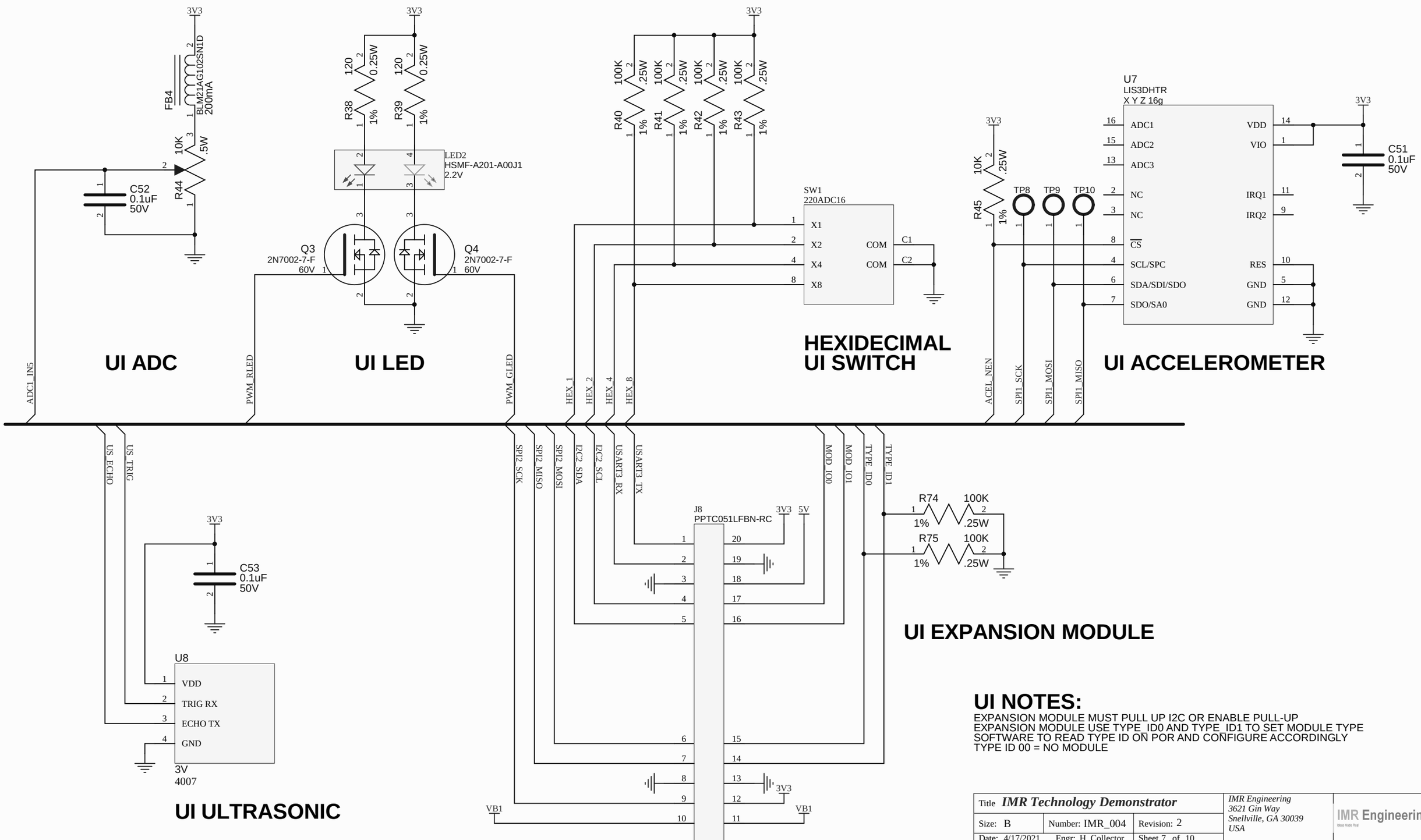

UI NOTES:

EXPANSION MODULE MUST PULL UP I2C OR ENABLE PULL-UP
EXPANSION MODULE USE TYPE_ID0 AND TYPE_ID1 TO SET MODULE TYPE
SOFTWARE TO READ TYPE ID ON POR AND CONFIGURE ACCORDINGLY
TYPE ID 00 = NO MODULE

Title *IMR Technology Demonstrator*			*IMR Engineering* *3621 Gin Way* *Snellville, GA 30039* *USA*
Size: B	Number: IMR_004	Revision: 2	
Date: 4/17/2021	Engr: H. Collector	Sheet 7 of 10	
File: UserInteractive.SchDoc			

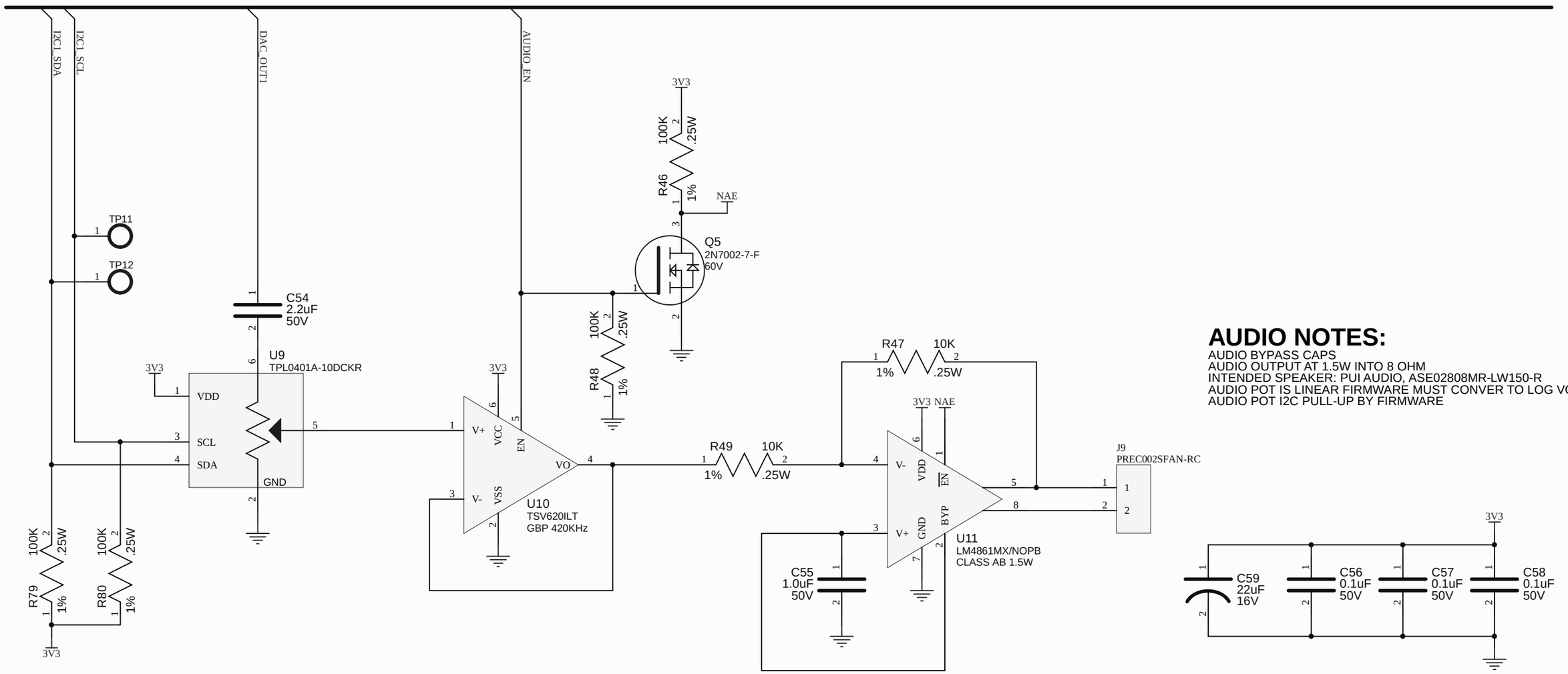

AUDIO NOTES:

AUDIO BYPASS CAPS
AUDIO OUTPUT AT 1.5W INTO 8 OHM
INTENDED SPEAKER: PUI AUDIO, ASE02808MR-LW150-R
AUDIO POT IS LINEAR FIRMWARE MUST CONVER TO LOG VOLUME
AUDIO POT I2C PULL-UP BY FIRMWARE

Title *IMR Technology Demonstrator*			*IMR Engineering* *3621 Gin Way* *Snellville, GA 30039* *USA*
Size: B	Number: IMR_004	Revision: 2	
Date: 4/17/2021	Engr: H. Collector	Sheet 8 of 10	
File: AudioAmp.SchDoc			

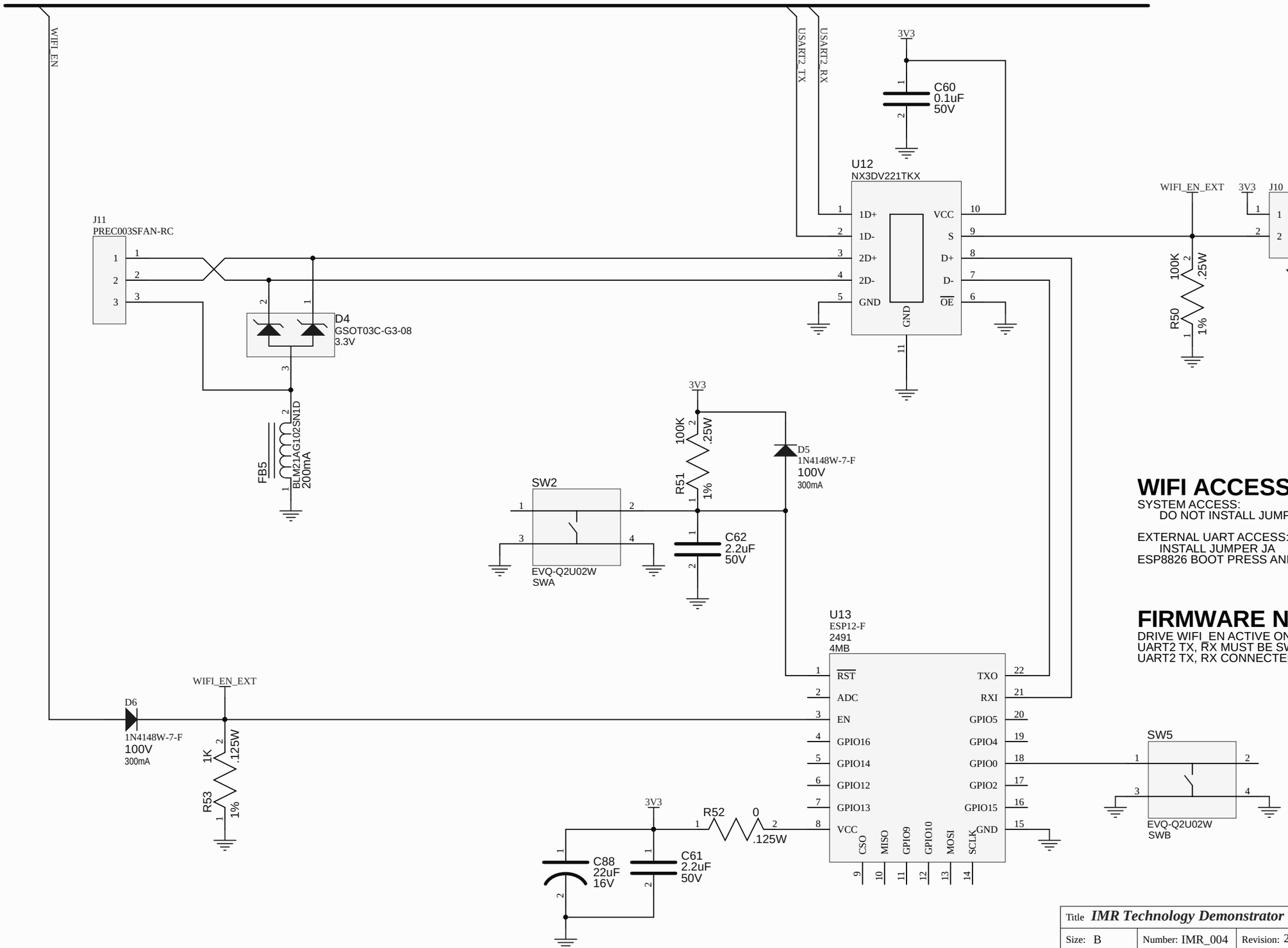

WIFI ACCESS NOTES:

SYSTEM ACCESS:
DO NOT INSTALL JUMPER JA

EXTERNAL UART ACCESS:
INSTALL JUMPER JA
ESP8826 BOOT PRESS AND RELEASE SWA AND SWB TOGETHER

FIRMWARE NOTES:

DRIVE WIFI_EN ACTIVE ONLY WHEN IN USE - HIGH PWR CONSUMPTION
UART2 TX, RX MUST BE SWAPED IN FIRMWARE
UART2 TX, RX CONNECTED THIS WAY TO SIMIPLIFY LAYOUT

Title *IMR Technology Demonstrator*			*IMR Engineering* *3621 Gin Way* *Snellville, GA 30039* *USA*
Size: B	Number: IMR_004	Revision: 2	
Date: 4/17/2021	Engr: H. Collector	Sheet 9 of 10	
File: Wifi.SchDoc			

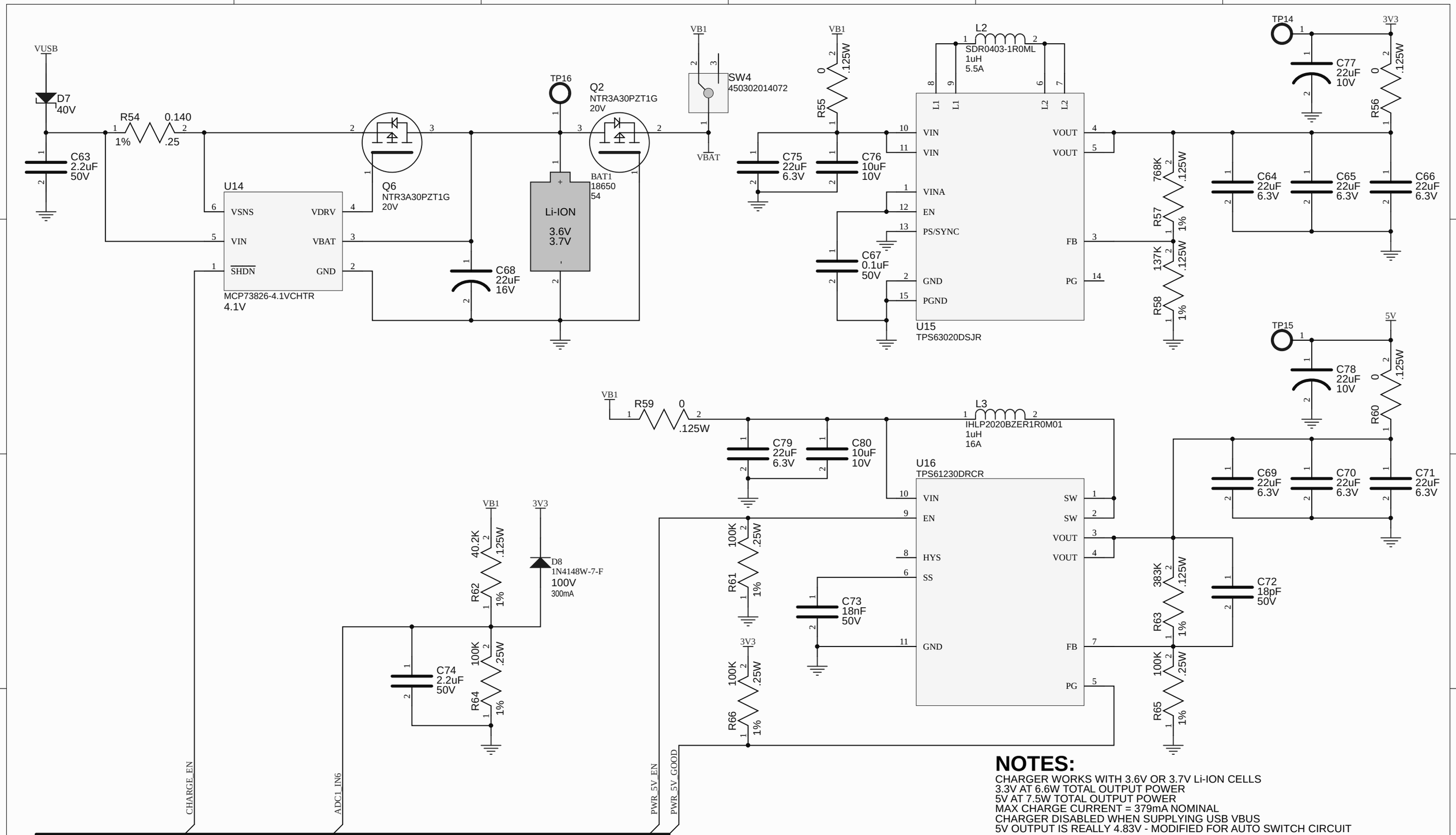

NOTES:

CHARGER WORKS WITH 3.6V OR 3.7V Li-ION CELLS
3.3V AT 6.6W TOTAL OUTPUT POWER
5V AT 7.5W TOTAL OUTPUT POWER
MAX CHARGE CURRENT = 379mA NOMINAL
CHARGER DISABLED WHEN SUPPLYING USB VBUS
5V OUTPUT IS REALLY 4.83V - MODIFIED FOR AUTO SWITCH CIRCUIT

Title *IMR Technology Demonstrator*			*IMR Engineering* *3621 Gin Way* *Snellville, GA 30039* *USA*
Size: B	Number: IMR_004	Revision: 2	
Date: 4/17/2021	Engr: H. Collector	Sheet 10 of 10	
File: Power.SchDoc			

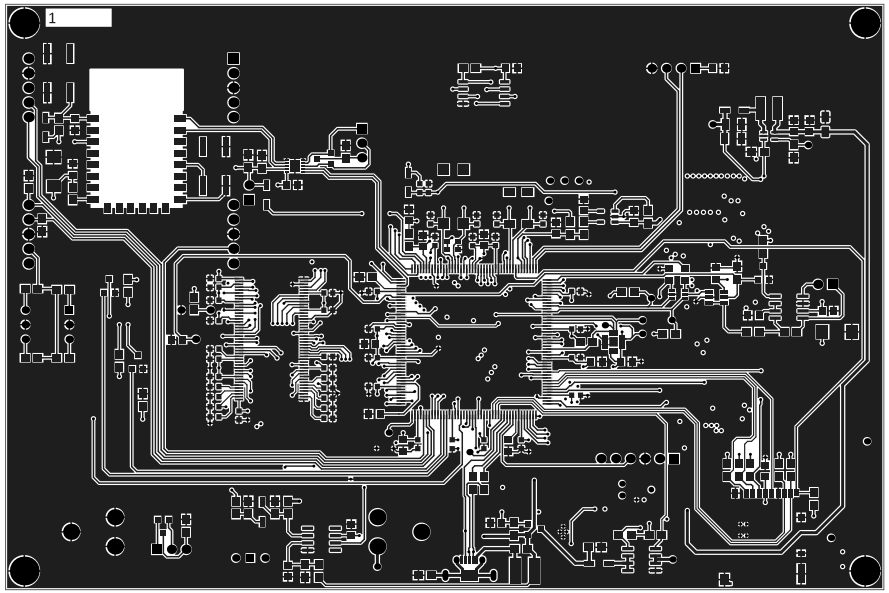

TOP

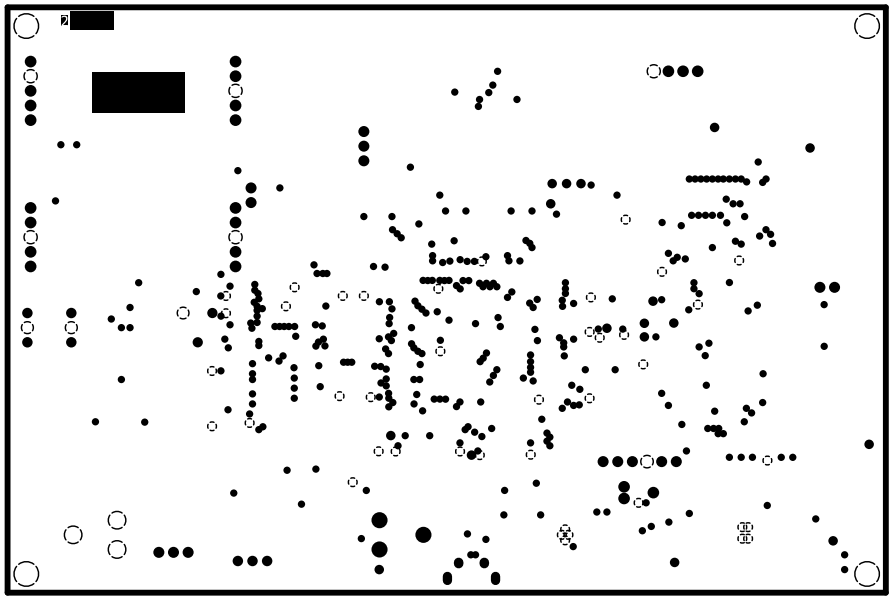

GND PLANE

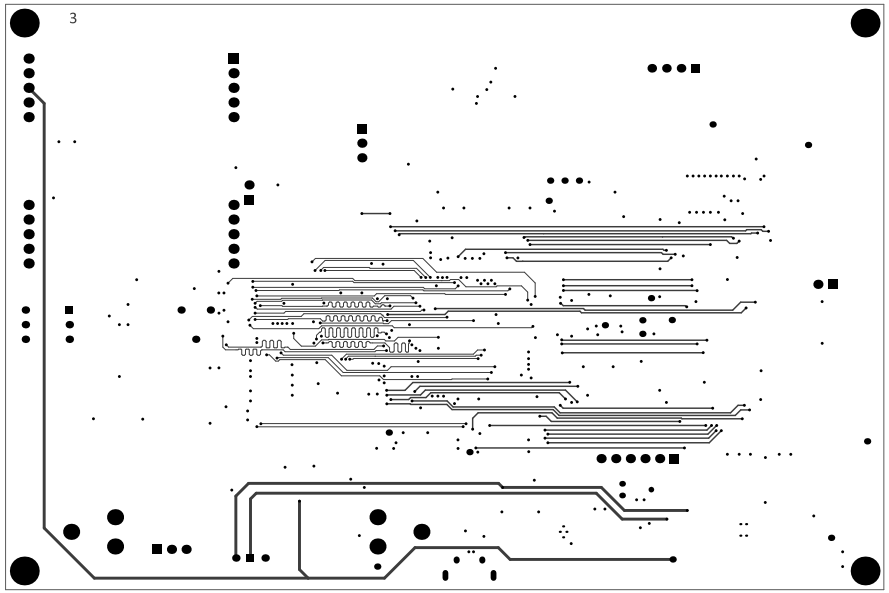

INNER SIGNAL 2

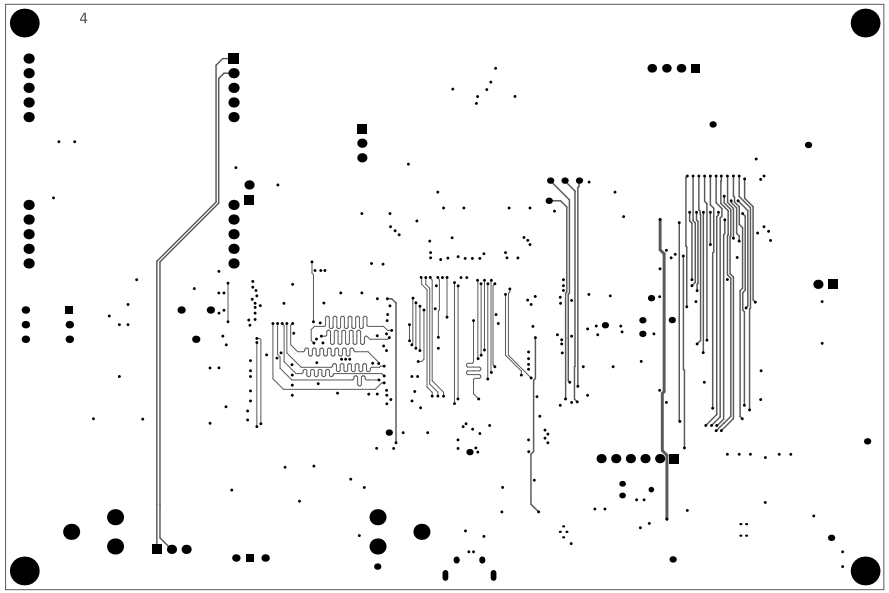

INNER SIGNAL 3

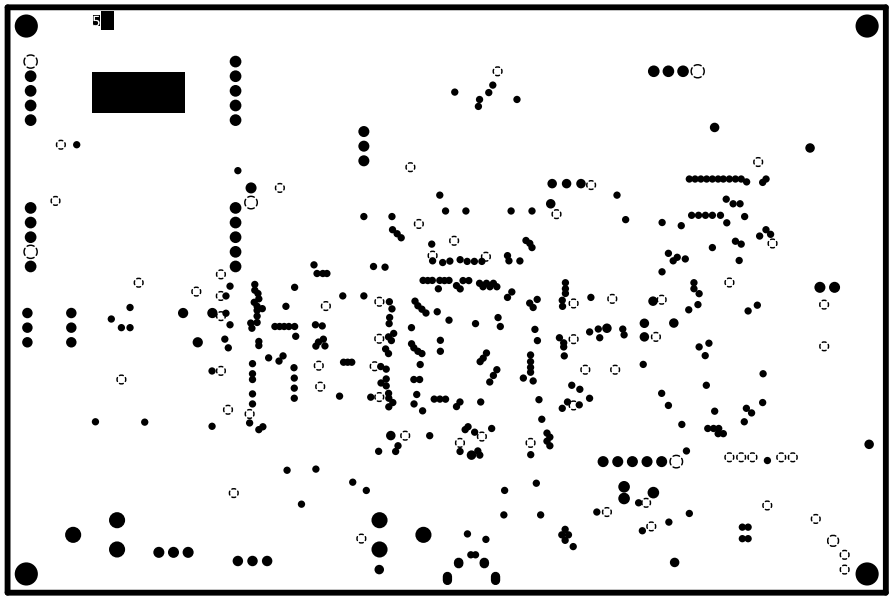

PWR PLANE

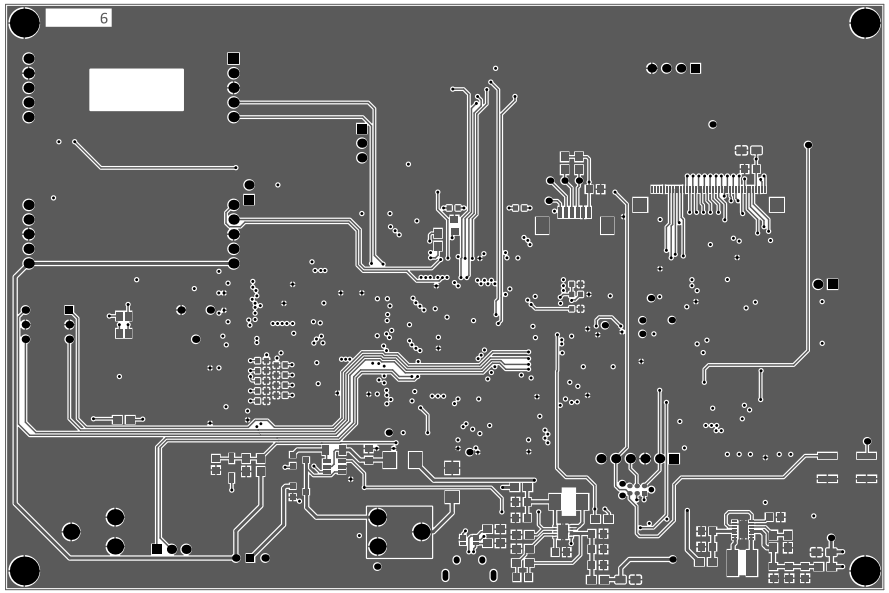

BOTTOM SIGNAL

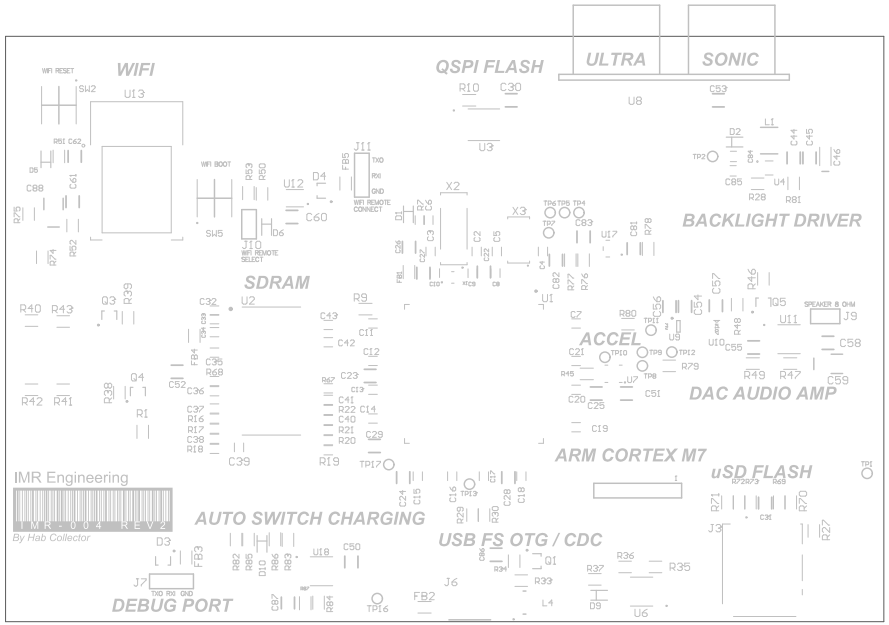
WIFI
QSPI FLASH
ULTRA
SONIC
BACKLIGHT DRIVER
SDRAM
ACCEL
DAC AUDIO AMP
ARM CORTEX M7
uSD FLASH
AUTO SWITCH CHARGING
USB FS OTG / CDC
DEBUG PORT
IMR Engineering
IMR-004 REV2
By Hab Collector

TOP SILK

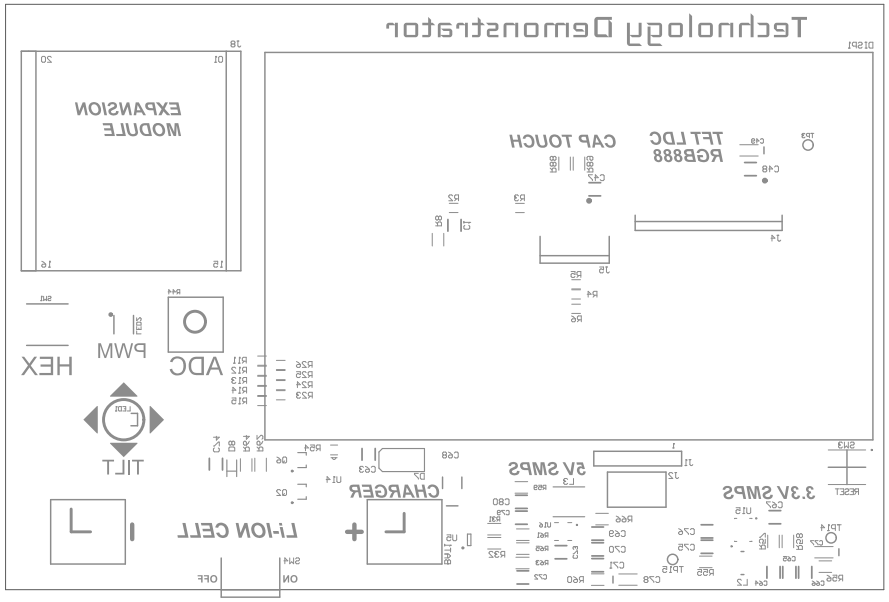

BOTTOM OVERLAY

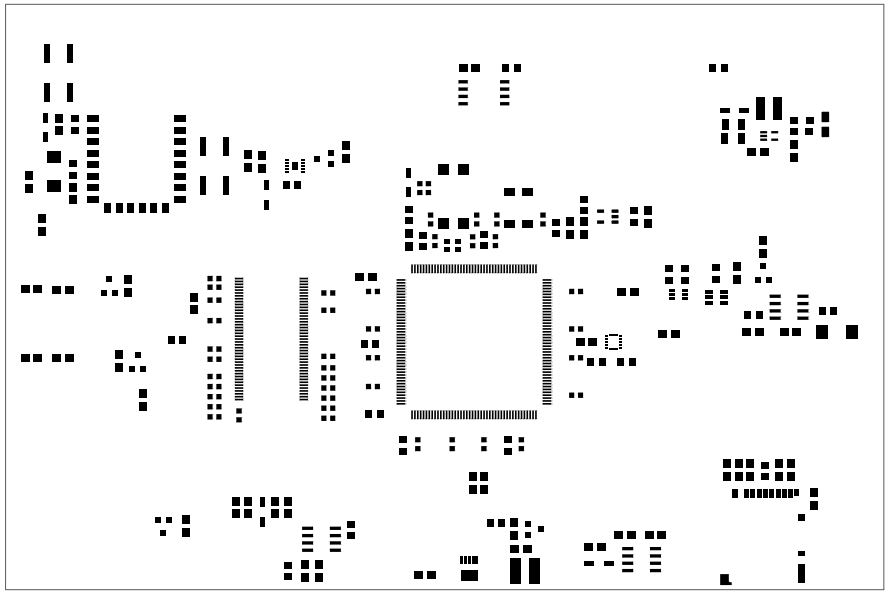

TOP PM

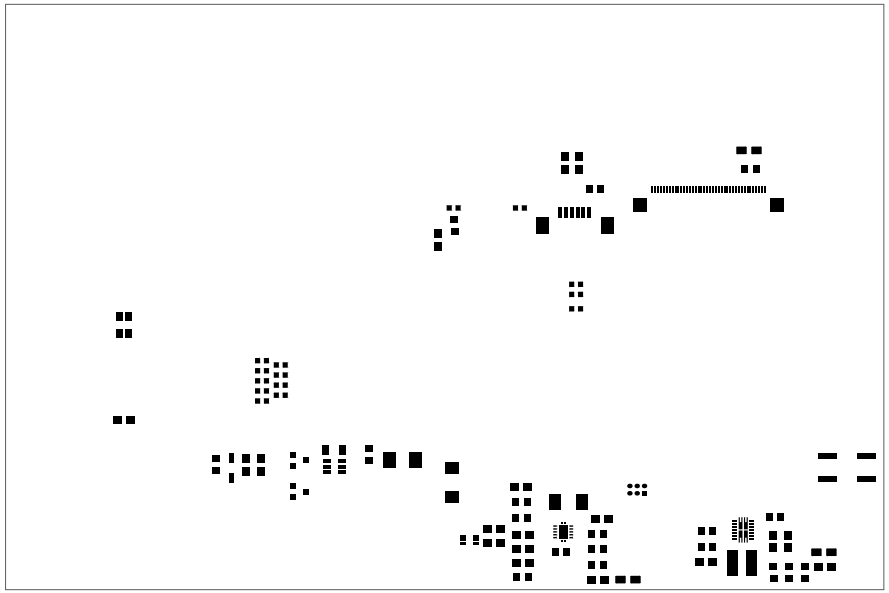

BOTTOM PM

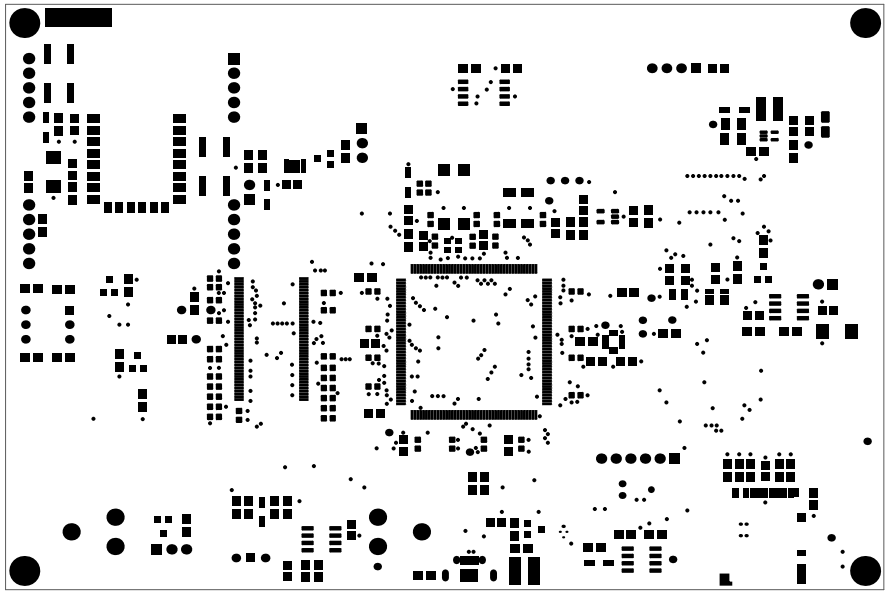

TOP SM

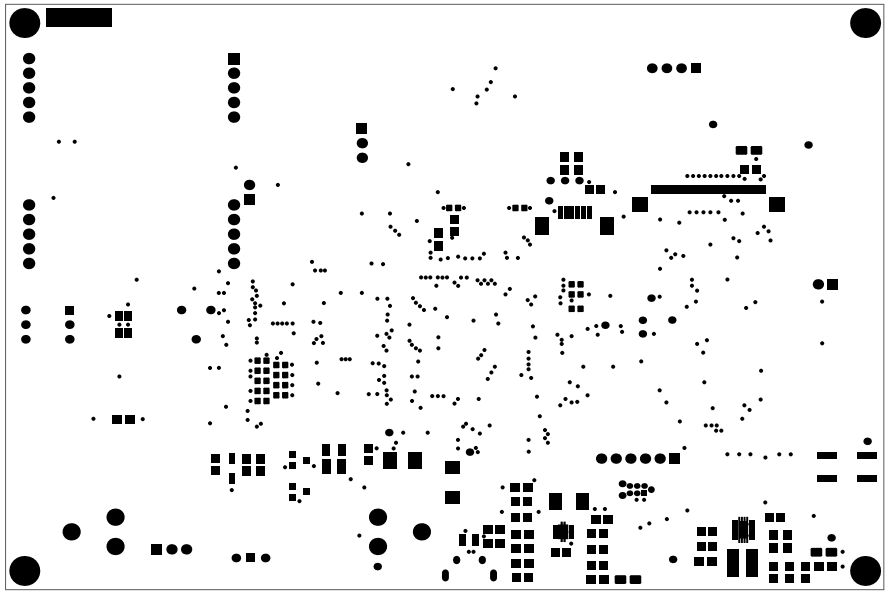

BOTTOM SM

Symbol	Count	Hole Size	Plated	Hole Type	Drill Layer Pair	Via/Pad	Pad Shape	Template	Hole Tolerance (+)	Hole Tolerance (-)
	375	10.00mil (0.254mm)	PTH	Round	Top Layer - Bottom Layer	(Mixed)	Rounded	(Mixed)		
	2	23.62mil (0.600mm)	PTH	Slot	Top Layer - Bottom Layer	Pad	Rounded	r100_190h60_130r100		
	17	25.00mil (0.635mm)	PTH	Round	Top Layer - Bottom Layer	Pad	Rounded	c110h64		
	2	25.59mil (0.650mm)	PTH	Slot	Top Layer - Bottom Layer	Pad	Rounded	r105_125h65_85r100		
	3	30.00mil (0.762mm)	PTH	Round	Top Layer - Bottom Layer	Pad	Rounded	c127h76		
	9	31.50mil (0.800mm)	PTH	Round	Top Layer - Bottom Layer	Pad	(Mixed)	(Mixed)		
	16	35.43mil (0.900mm)	PTH	Round	Top Layer - Bottom Layer	Pad	(Mixed)	(Mixed)		
	3	39.37mil (1.000mm)	NPTH	Round	Top Layer - Bottom Layer	Pad	Rounded	(Mixed)		
	4	39.37mil (1.000mm)	PTH	Round	Top Layer - Bottom Layer	Pad	(Mixed)	(Mixed)		
	20	40.00mil (1.016mm)	PTH	Round	Top Layer - Bottom Layer	Pad	(Mixed)	(Mixed)		
	6	70.00mil (1.778mm)	PTH	Round	Top Layer - Bottom Layer	Pad	Rounded	c279h178		
	4	118.11mil (3.000mm)	PTH	Round	Top Layer - Bottom Layer	Pad	Rounded	c500h300		
	461 Total									

Slot definitions : Routed Path Length = Calculated from tool start centre position to tool end centre position.
Hole Length = Routed Path Length + Tool Size = Slot length as defined in the PCB layout

Layer	Name	Material	Thickness	Constant	Board Layer Stack	Board Layer Stack
1	Top Overlay					
2	Top Solder	SM-001	1.00mil	4		
3	Top Layer	Copper	1.38mil			
4	Dielectric 1	PP-006	2.80mil	4.1		
5	Dielectric 2	PP-006	2.80mil	4.1		
6	GND_Plane	Copper	1.38mil			
7	Dielectric 3	Core-035	18.00mil	4.7		
8	Int2 (Sign)	Copper	1.38mil			
9	Dielectric 4	PP-006	2.80mil	4.1		
10	Dielectric 5	PP-006	2.80mil	4.1		
11	Int3 (Sign)	Copper	1.38mil			
12	Dielectric 6	Core-035	18.00mil	4.7		
13	PWR_Plane	Copper	1.38mil			
14	Dielectric 7	PP-006	2.80mil	4.1		
15	Dielectric 8	PP-006	2.80mil	4.1		
16	Bottom Layer	Copper	1.38mil			
17	Bottom Solder	SM-001	1.00mil	4		
18	Bottom Overlay					

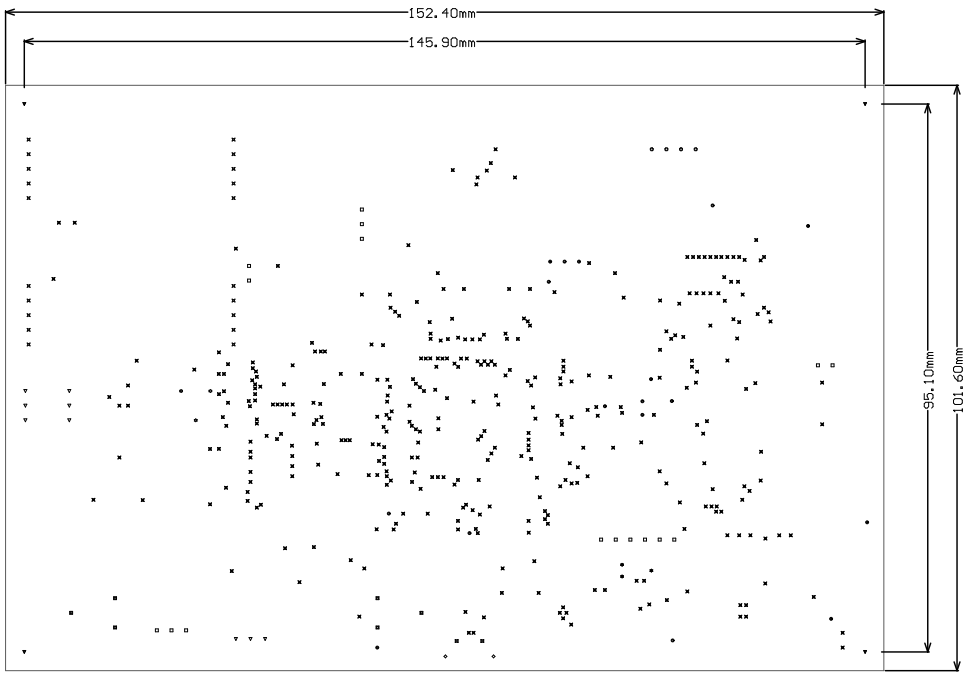

FAB & DRILL DWG

PCB FABRICATION NOTES:

MATERIAL:
FR4 (GF per MIL-P-13949) MIN UL 94V0

Cu WEIGHT:
OUTER LAYER: 1oz
INNER LAYER: STANDARD (SEE LAYER STACK)

SOLDER MASK:
TYPE: LPI (LIQUID PHOTO-IMAGE)
COVER: SMOBC (SOLDER MASK OVER BARE Cu)
COLOR: RED

OVERALL PCB THICKNESS:
PCB: 63MIL (SEE LAYER STACK)
TOLERANCE: 7MIL

PCB ELECTRICAL TEST
TESTED TO GERBER DATA
PURCHASE ORDER TO OVERRIDE

HOLE DIAMETER TOLERANCE:
PLATED HOLE TOLERANCE: 3MIL
NON PLATED HOLE TOLERANCE: 3MIL

SILK SCREEN
SIDES: TOP AND BOTTOM
COLOR: WHITE

ACCEPTABILITY:
STANDARD: IPC-A-600 (LATEST REV)
MFG TO ADD: DATE CODE, UL FLAME CODE

SURFACE FINISH:
PROTOTYPE: HASL OR EING
PRODUCTION: ENIG (PER PO)

IMR Engineering, LLC	REV 2	ENGG:
IMR-004	4/17/2021	Hab Collector

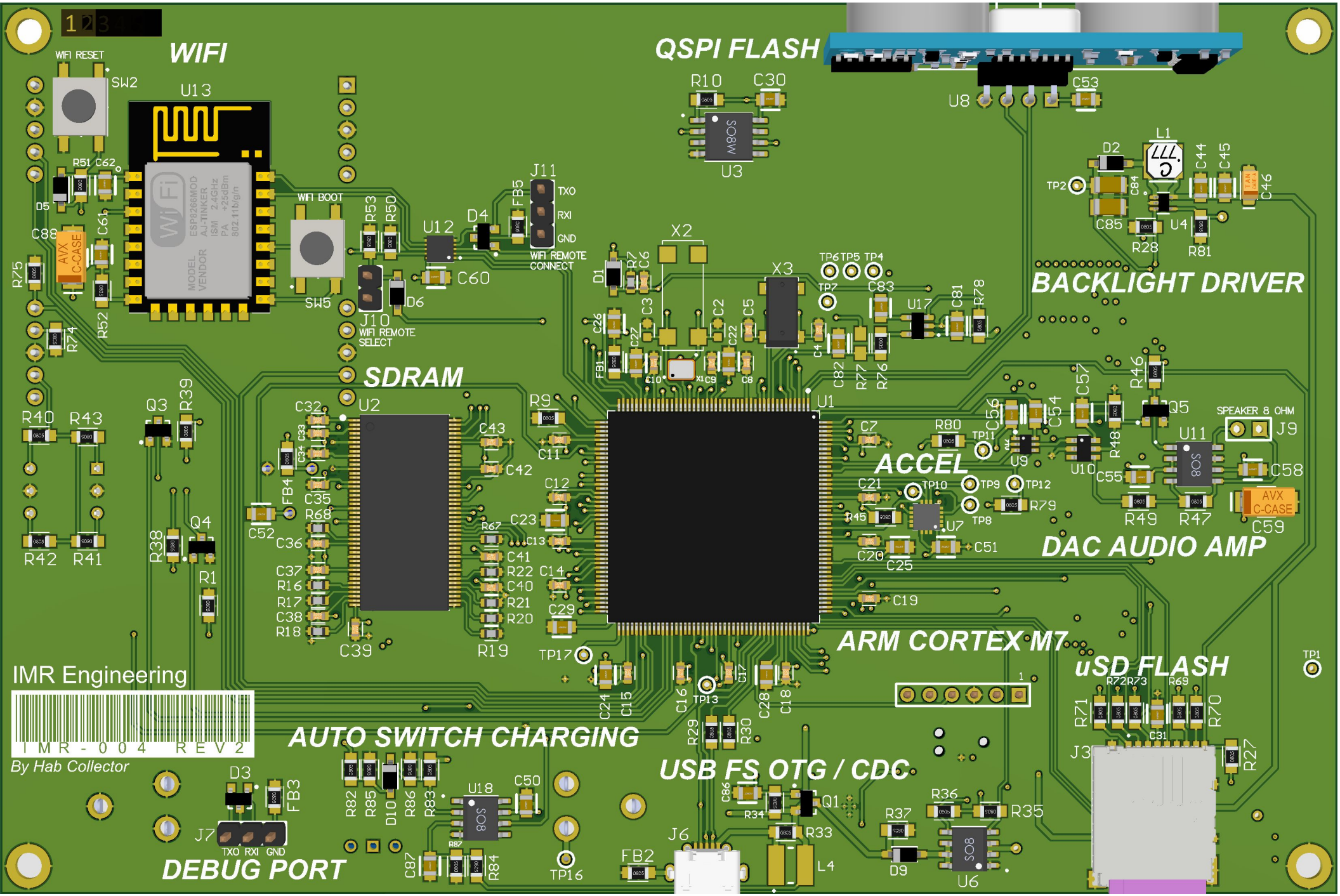
WIFI
WIFI RESET
SW2
U13
WIFI BOOT
SW5
J11
TXO
RXI
GND
WIFI REMOTE CONNECT
J10
WIFI REMOTE SELECT
QSPI FLASH
U8
U3
BACKLIGHT DRIVER
SDRAM
U2
U1
ACCEL
U7
DAC AUDIO AMP
SPEAKER 8 OHM
J9
U11
ARM CORTEX M7
uSD FLASH
J3
IMR Engineering
IMR-004 REV2
By Hab Collector
AUTO SWITCH CHARGING
U18
USB FS OTG / CDC
J6
U6
DEBUG PORT
J7
TXO RXI GND

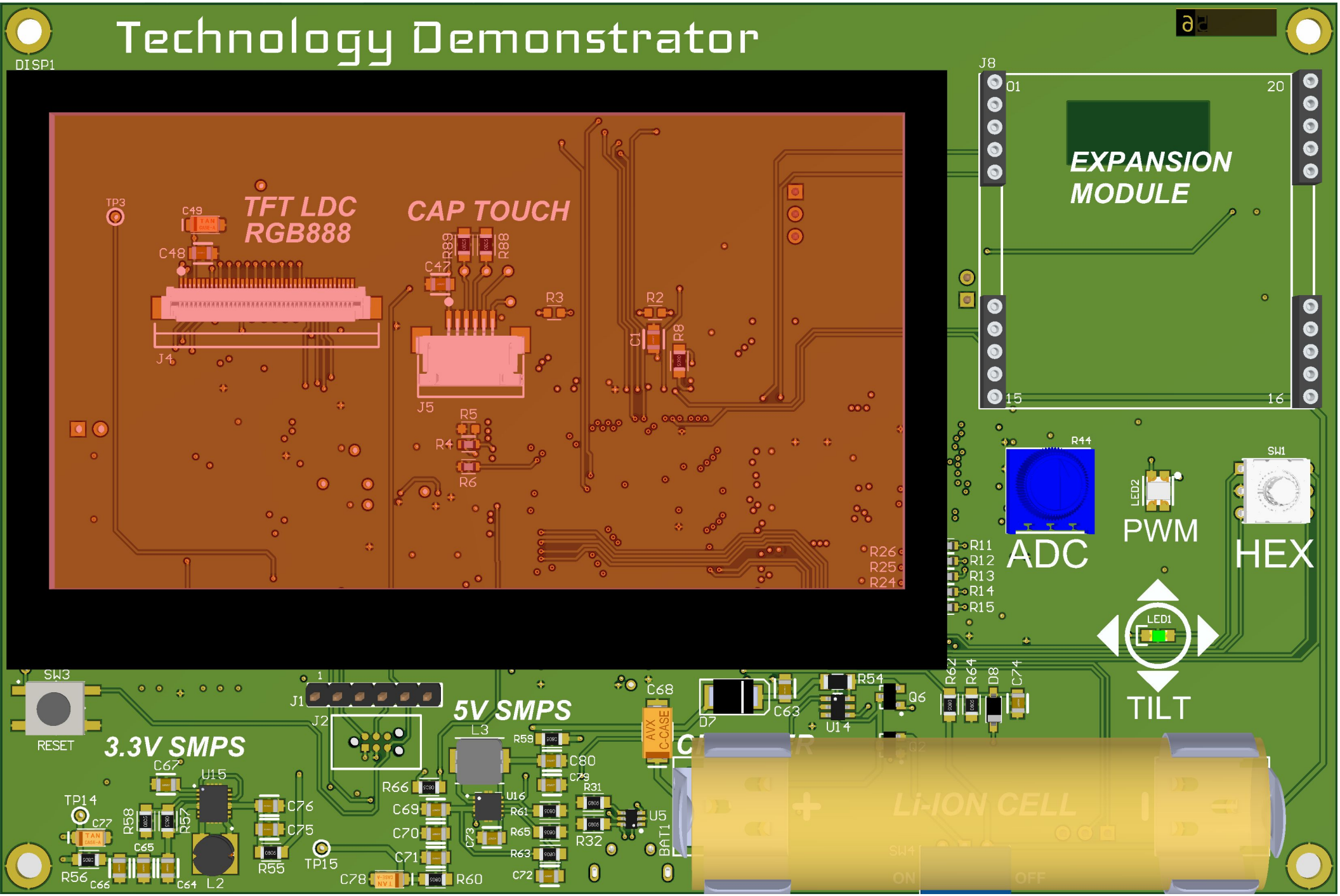
Technology Demonstrator
DISP1
TFT LDC
RGB888
CAP TOUCH
J4
J5
J8
EXPANSION
MODULE
ADC
PWM
HEX
TILT
LED1
LED2
SW1
SW3
RESET
3.3V SMPS
5V SMPS
J1
J2
Li-ION CELL
SW4
ON
OFF

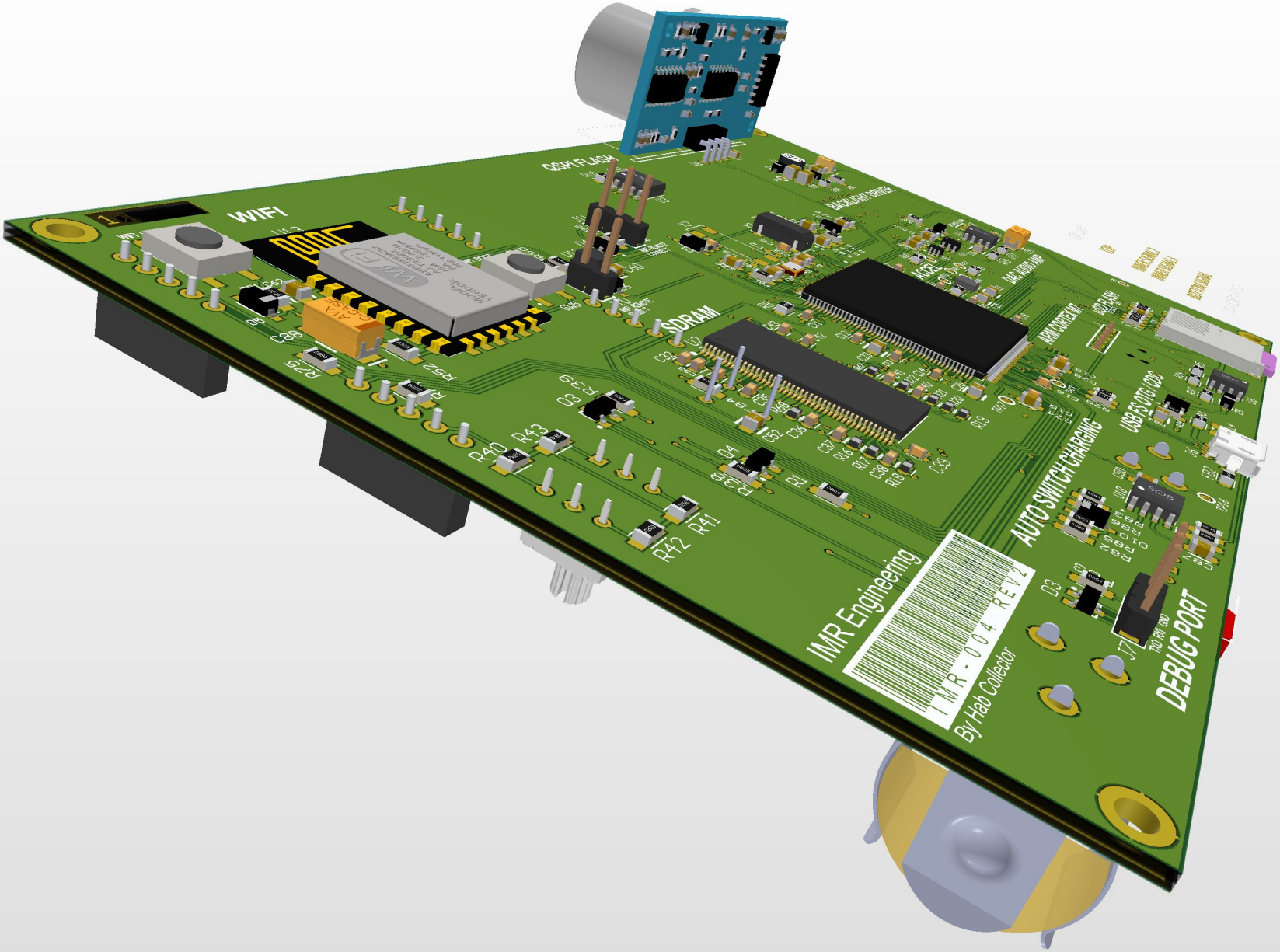
WIFI
QSPI FLASH
BACKLIGHT DRIVER
SDRAM
ARM CORTEX M7
QSPI FLASH
USB FS OTG CONN
AUTO SWITCH CHARGING
IMR Engineering
IMR-004 REV2
By Hab Collector
DEBUG PORT