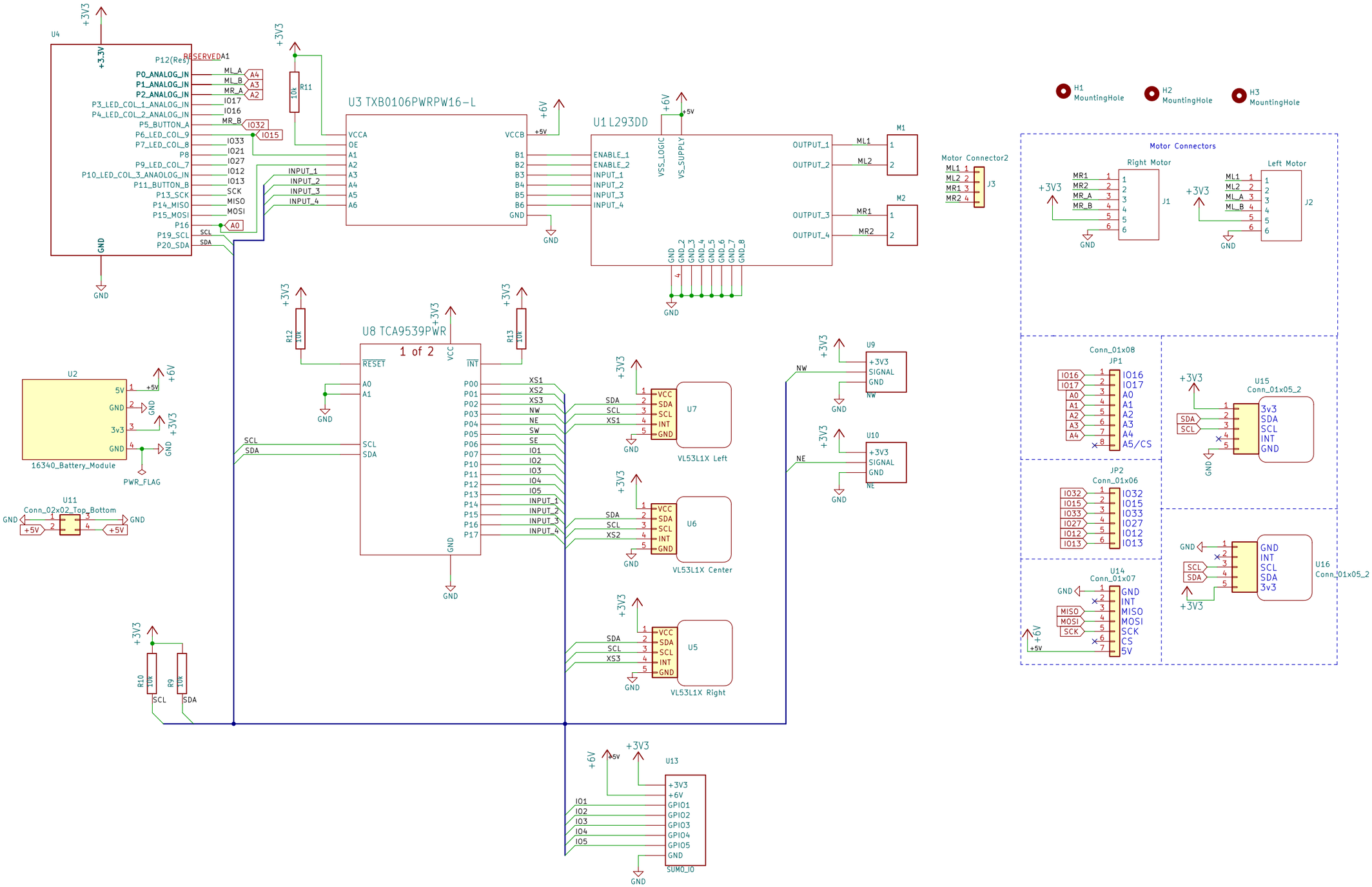
U4
+3V3
+3.3V
P12(Res)
RESERVED
A1
P0_ANALOG_IN
P1_ANALOG_IN
P2_ANALOG_IN
P3_LED_COL_1_ANALOG_IN
P4_LED_COL_2_ANALOG_IN
P5_BUTTON_A
P6_LED_COL_9
P7_LED_COL_8
P8
P9_LED_COL_7
P10_LED_COL_3_ANAOLOG_IN
P11_BUTTON_B
P13_SCK
P14_MISO
P15_MOSI
P16
P19_SCL
P20_SDA
ML_A
ML_B
MR_A
MR_B
A4
A3
A2
IO17
IO16
IO32
IO15
IO33
IO21
IO27
IO12
IO13
SCK
MISO
MOSI
A0
SCL
SDA
GND
R11
10k
U3 TXB0106PWRPW16-L
VCCA
OE
A1
A2
A3
A4
A5
A6
VCCB
B1
B2
B3
B4
B5
B6
INPUT_1
INPUT_2
INPUT_3
INPUT_4
+6V
+5V
U1 L293DD
ENABLE_1
ENABLE_2
VSS_LOGIC
VS_SUPPLY
OUTPUT_1
OUTPUT_2
OUTPUT_3
OUTPUT_4
M1
M2
ML1
ML2
MR1
MR2
Motor Connector2
J3
H1
MountingHole
H2
MountingHole
H3
MountingHole
Motor Connectors
Right Motor
Left Motor
J1
J2
U2
5V
3v3
16340_Battery_Module
PWR_FLAG
U11
Conn_02x02_Top_Bottom
R12
10k
R13
10k
U8 TCA9539PWR
1 of 2
RESET
VCC
INT
P00
P01
P02
P03
P04
P05
P06
P07
P10
P11
P12
P13
P14
P15
P16
P17
XS1
XS2
XS3
NW
NE
SW
SE
IO1
IO2
IO3
IO4
IO5
U7
VL53L1X Left
U6
VL53L1X Center
U5
VL53L1X Right
U9
U10
+3V3
SIGNAL
GND
Conn_01x08
JP1
IO16
IO17
A0
A1
A2
A3
A4
A5/CS
JP2
Conn_01x06
IO32
IO15
IO33
IO27
IO12
IO13
U14
Conn_01x07
GND
INT
MISO
MOSI
SCK
CS
5V
U15
Conn_01x05_2
3v3
SDA
SCL
INT
GND
U16
Conn_01x05_2
R10
10k
R9
10k
U13
+3V3
+6V
GPIO1
GPIO2
GPIO3
GPIO4
GPIO5
GND
SUMO_IO