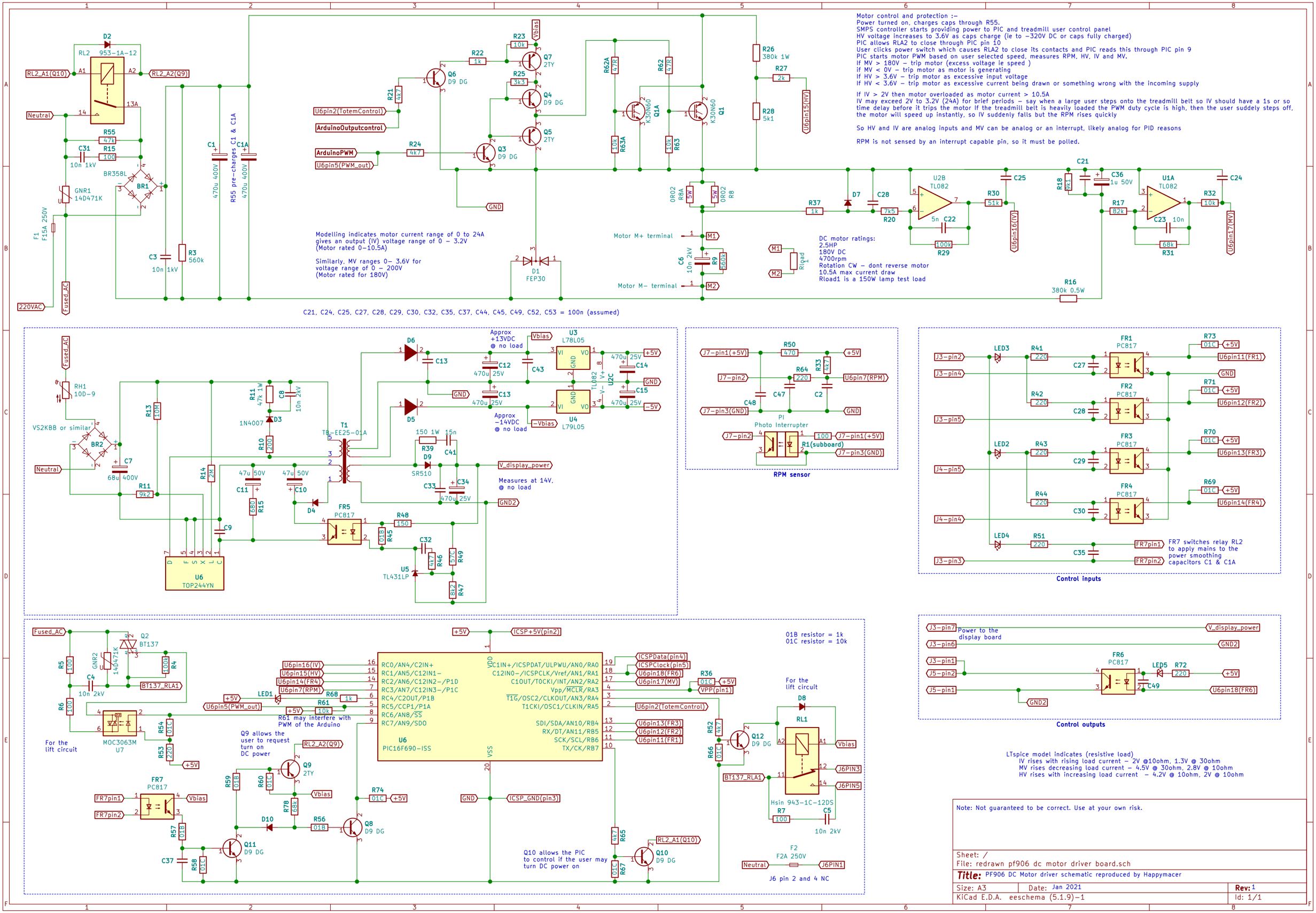
Motor control and protection :-
Power turned on, charges caps through R55.
SMPS controller starts providing power to PIC and treadmill user control panel
HV voltage increases to 3.6V as caps charge (ie to -320V DC or caps fully charged)
PIC allows RLA2 to close through PIC pin 10
User clicks power switch which causes RLA2 to close its contacts and PIC reads this through PIC pin 9
PIC starts motor PWM based on user selected speed, measures RPM, HV, IV and MV.
If MV > 180V - trip motor (excess voltage ie speed)
if MV < 0V - trip motor as motor is generating
If HV > 3.6V - trip motor as excessive input voltage
If HV < 3.6V - trip motor as excessive current being drawn or something wrong with the incoming supply
If IV > 2V then motor overloaded as motor current > 10.5A
IV may exceed 2V to 3.2V (24A) for brief periods - say when a large user steps onto the treadmill belt so IV should have a 1s or so time delay before it trips the motor If the treadmill belt is heavily loaded the PWM duty cycle is high, then the user suddely steps off, the motor will speed up instantly, so IV suddenly falls but the RPM rises quickly
So HV and IV are analog inputs and MV can be analog or an interrupt, likely analog for PID reasons
RPM is not sensed by an interrupt capable pin, so it must be polled.
Modelling indicates motor current range of 0 to 24A gives an output (IV) voltage range of 0 - 3.2V (Motor rated 0-10.5A)
Similarly, MV ranges 0- 3.6V for voltage range of 0 - 200V (Motor rated for 180V)
DC motor ratings:
2.5HP
180V DC
4700rpm
Rotation CW - dont reverse motor
10.5A max current draw
Rload1 is a 150W lamp test load
C21, C24, C25, C27, C28, C29, C30, C32, C35, C37, C44, C45, C49, C52, C53 = 100n (assumed)
RPM sensor
Control inputs
Control outputs
FR7 switches relay RL2 to apply mains to the power smoothing capacitors C1 & C1A
Power to the display board
01B resistor = 1k
01C resistor = 10k
R61 may interfere with PWM of the Arduino
Q9 allows the user to request turn on DC power
Q10 allows the PIC to control if the user may turn DC power on
For the lift circuit
LTspice model indicates (resistive load)
IV rises with rising load current - 2V @10ohm, 1.3V @ 30ohm
MV rises decreasing load current - 4.5V @ 30ohm, 2.8V @ 10ohm
HV rises with increasing load current - 4.2V @ 10ohm, 2V @ 10ohm
Note: Not guaranteed to be correct. Use at your own risk.
Sheet: /
File: redrawn pf906 dc motor driver board.sch
Title: PF906 DC Motor driver schematic reproduced by Happymacer
Size: A3
Date: Jan 2021
Rev: 1
KiCad E.D.A. eeschema (5.1.9)-1
Id: 1/1