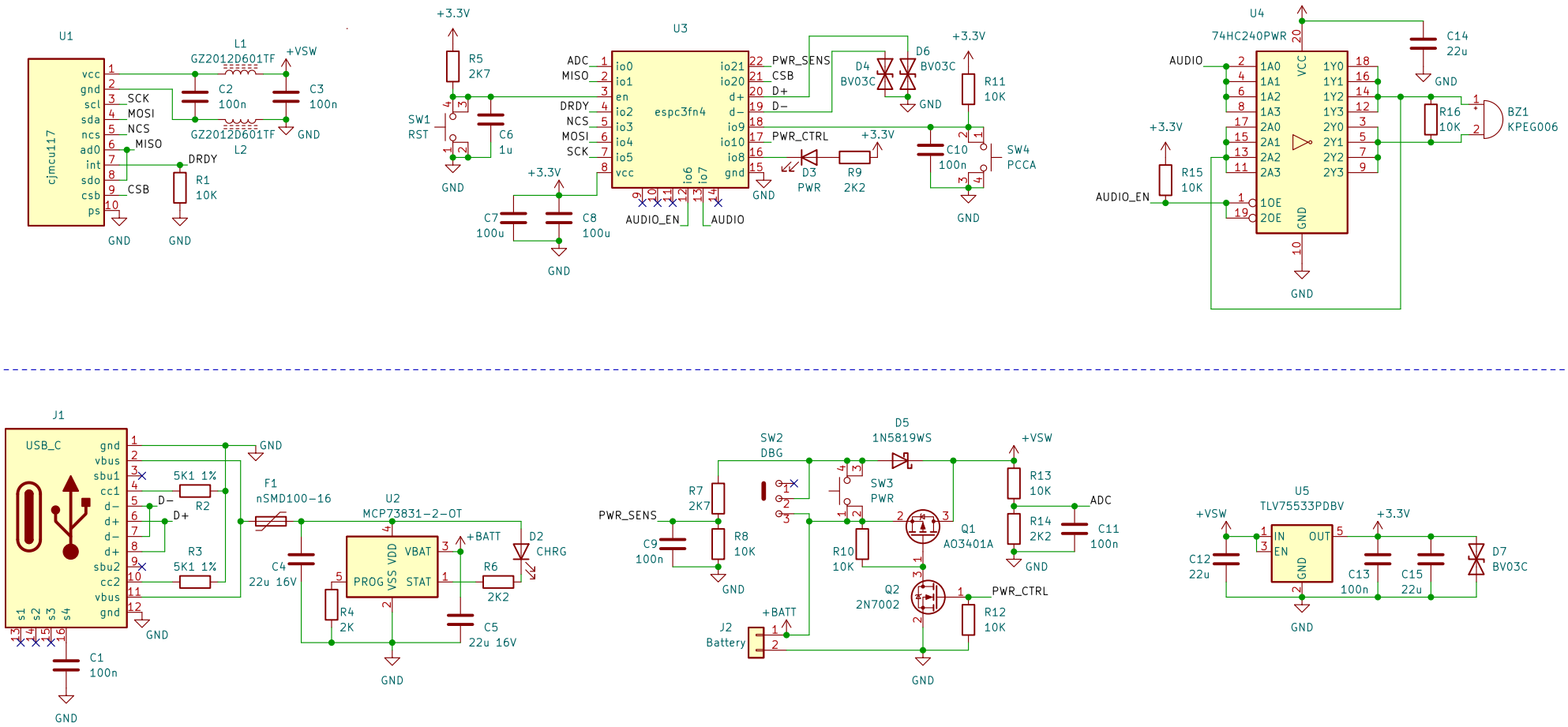

Sheet: /
File: vhario−espc3.kicad_sch

Title: VhARIO_ESPC3 Rev B

Size: A4	Date:	Rev: B
KiCad E.D.A. kicad 6.0.6−3a73a75311~116~ubuntu22.04.1		Id: 1/1