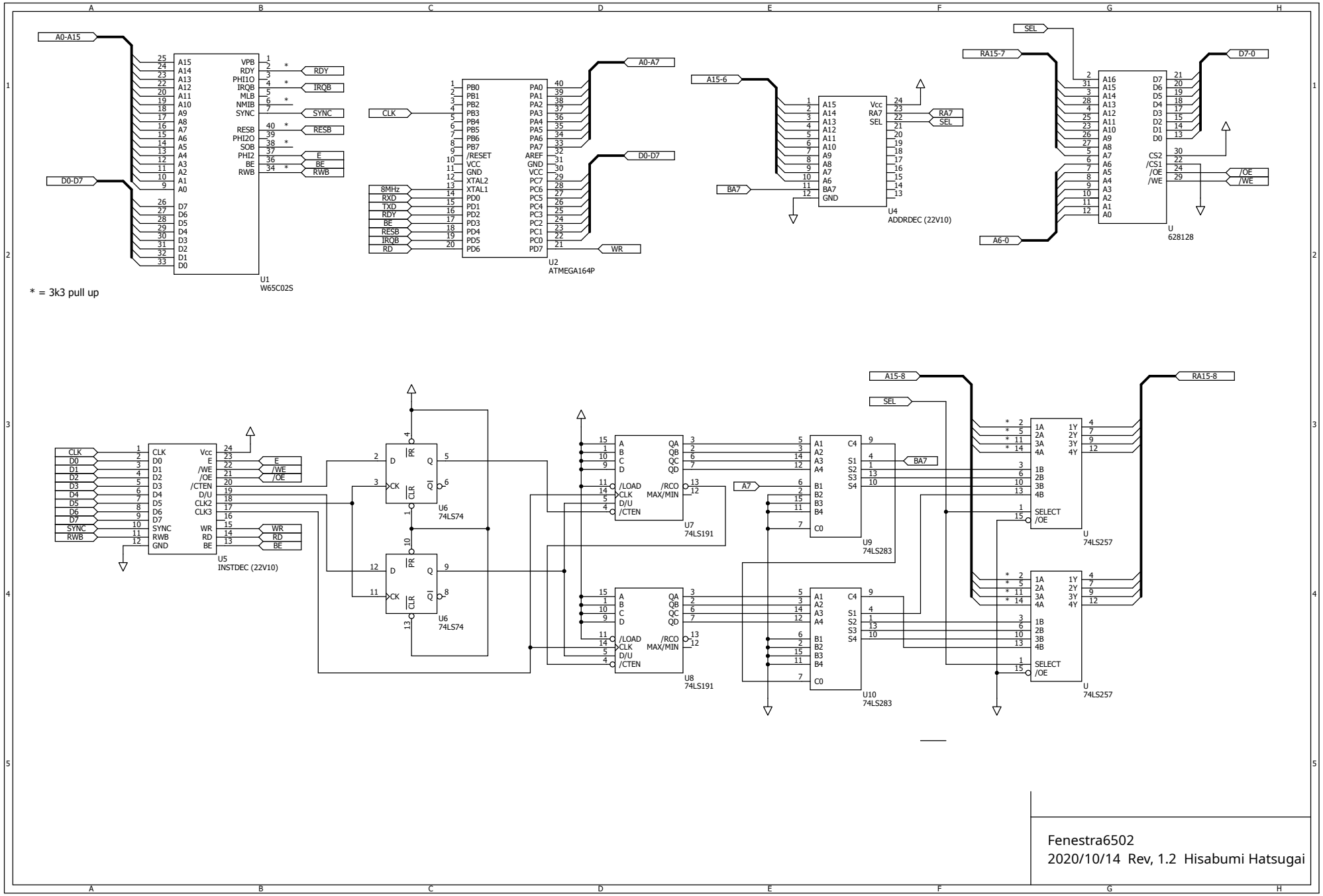

Fenestra6502
2020/10/14 Rev, 1.2 Hisabumi Hatsugai