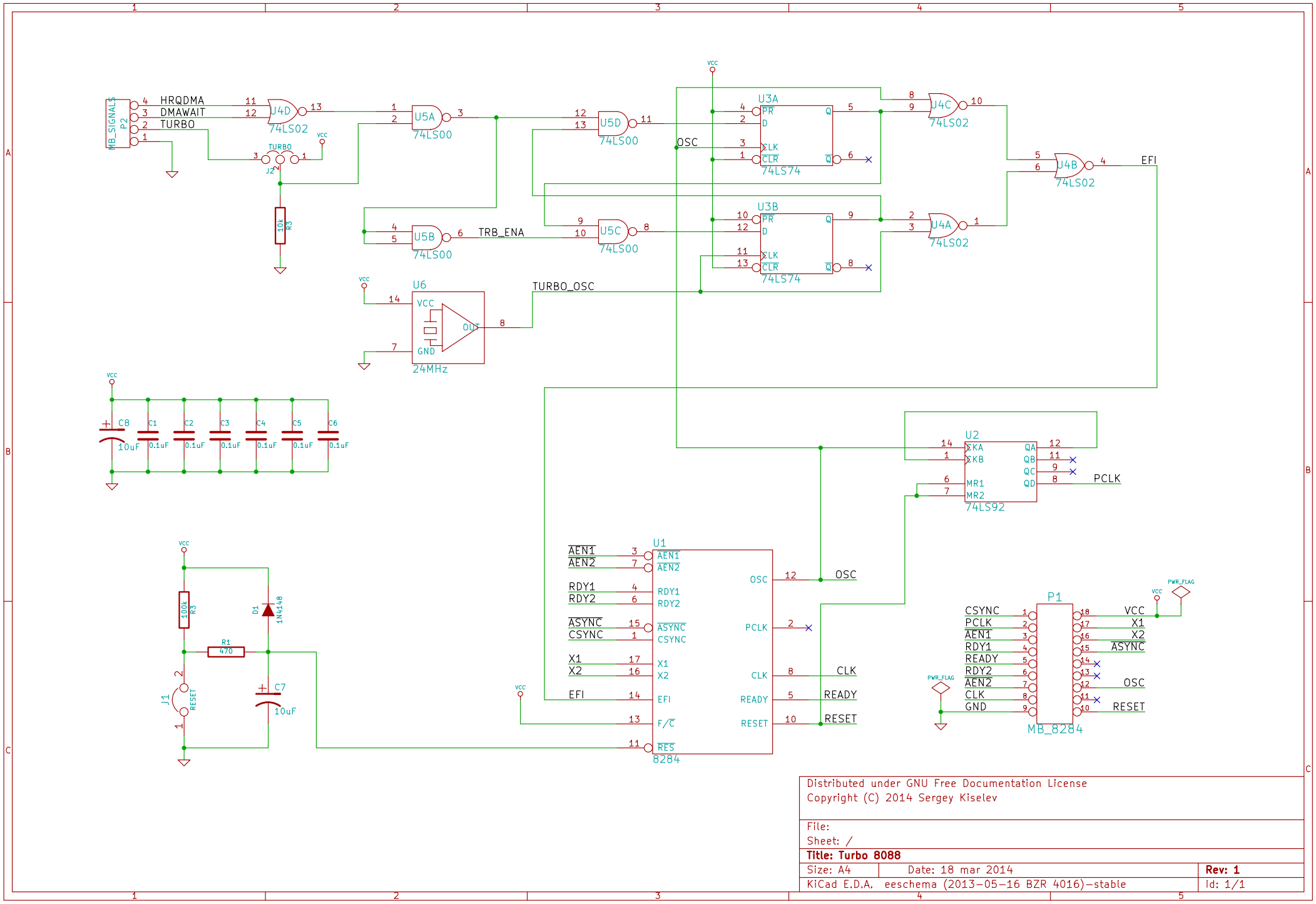

Distributed under GNU Free Documentation License
Copyright (C) 2014 Sergey Kiselev

File:
Sheet: /

Title: Turbo 8088

Size: A4	Date: 18 mar 2014	**Rev: 1**
KiCad E.D.A. eeschema (2013-05-16 BZR 4016)-stable		Id: 1/1