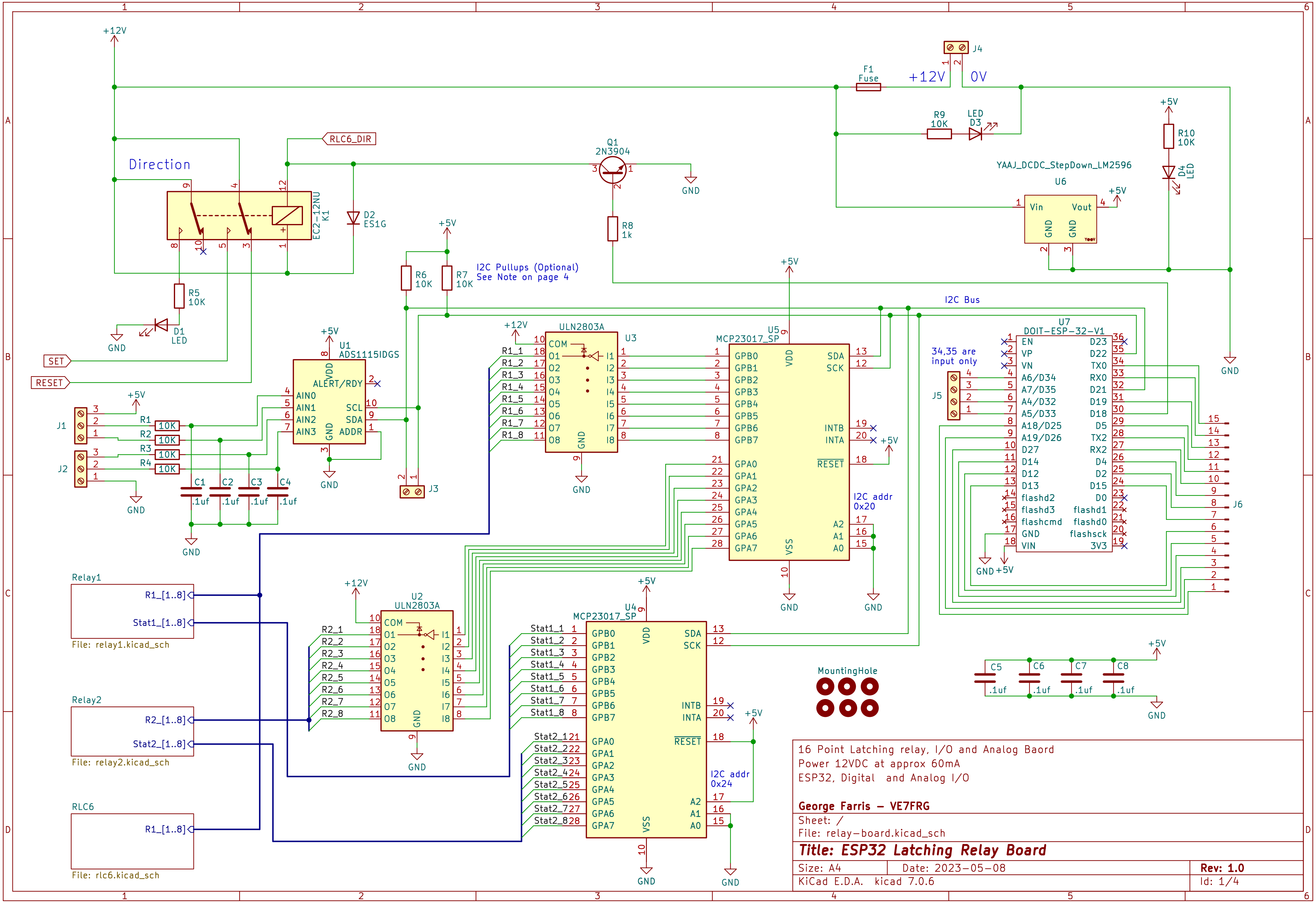
+12V
Direction
RLC6_DIR
K1
EC2-12NU
D2
ES1G
Q1
2N3904
R8
1k
GND
J4
F1
Fuse
+12V
0V
R9
10K
LED
D3
+5V
R10
10K
D4
LED
YAAJ_DCDC_StepDown_LM2596
U6
Vin
Vout
GND
R6
10K
R7
10K
I2C Pullups (Optional)
See Note on page 4
I2C Bus
R5
10K
D1
LED
SET
RESET
U1
ADS1115IDGS
VDD
ALERT/RDY
AIN0
AIN1
AIN2
AIN3
SCL
SDA
ADDR
J1
J2
R1
R2
R3
R4
10K
C1
C2
C3
C4
.1uf
J3
U3
ULN2803A
COM
R1_1
R1_2
R1_3
R1_4
R1_5
R1_6
R1_7
R1_8
U5
MCP23017_SP
GPB0
GPB1
GPB2
GPB3
GPB4
GPB5
GPB6
GPB7
GPA0
GPA1
GPA2
GPA3
GPA4
GPA5
GPA6
GPA7
SDA
SCK
INTB
INTA
RESET
I2C addr
0x20
A2
A1
A0
VSS
U7
DOIT-ESP-32-V1
34,35 are
input only
J5
J6
EN
VP
VN
A6/D34
A7/D35
A4/D32
A5/D33
A18/D25
A19/D26
D27
D14
D12
D13
flashd2
flashd3
flashcmd
GND
VIN
D23
D22
TX0
RX0
D21
D19
D18
D5
TX2
RX2
D4
D2
D15
D0
flashd1
flashd0
flashsck
3V3
U2
ULN2803A
R2_1
R2_2
R2_3
R2_4
R2_5
R2_6
R2_7
R2_8
U4
MCP23017_SP
Stat1_1
Stat1_2
Stat1_3
Stat1_4
Stat1_5
Stat1_6
Stat1_7
Stat1_8
Stat2_1
Stat2_2
Stat2_3
Stat2_4
Stat2_5
Stat2_6
Stat2_7
Stat2_8
I2C addr
0x24
Relay1
R1_[1..8]
Stat1_[1..8]
File: relay1.kicad_sch
Relay2
R2_[1..8]
Stat2_[1..8]
File: relay2.kicad_sch
RLC6
R1_[1..8]
File: rlc6.kicad_sch
MountingHole
C5
C6
C7
C8
.1uf

16 Point Latching relay, I/O and Analog Baord
Power 12VDC at approx 60mA
ESP32, Digital and Analog I/O

George Farris - VE7FRG

Sheet: /
File: relay-board.kicad_sch

Title: ESP32 Latching Relay Board

Size: A4 Date: 2023-05-08 **Rev: 1.0**
KiCad E.D.A. kicad 7.0.6 Id: 1/4

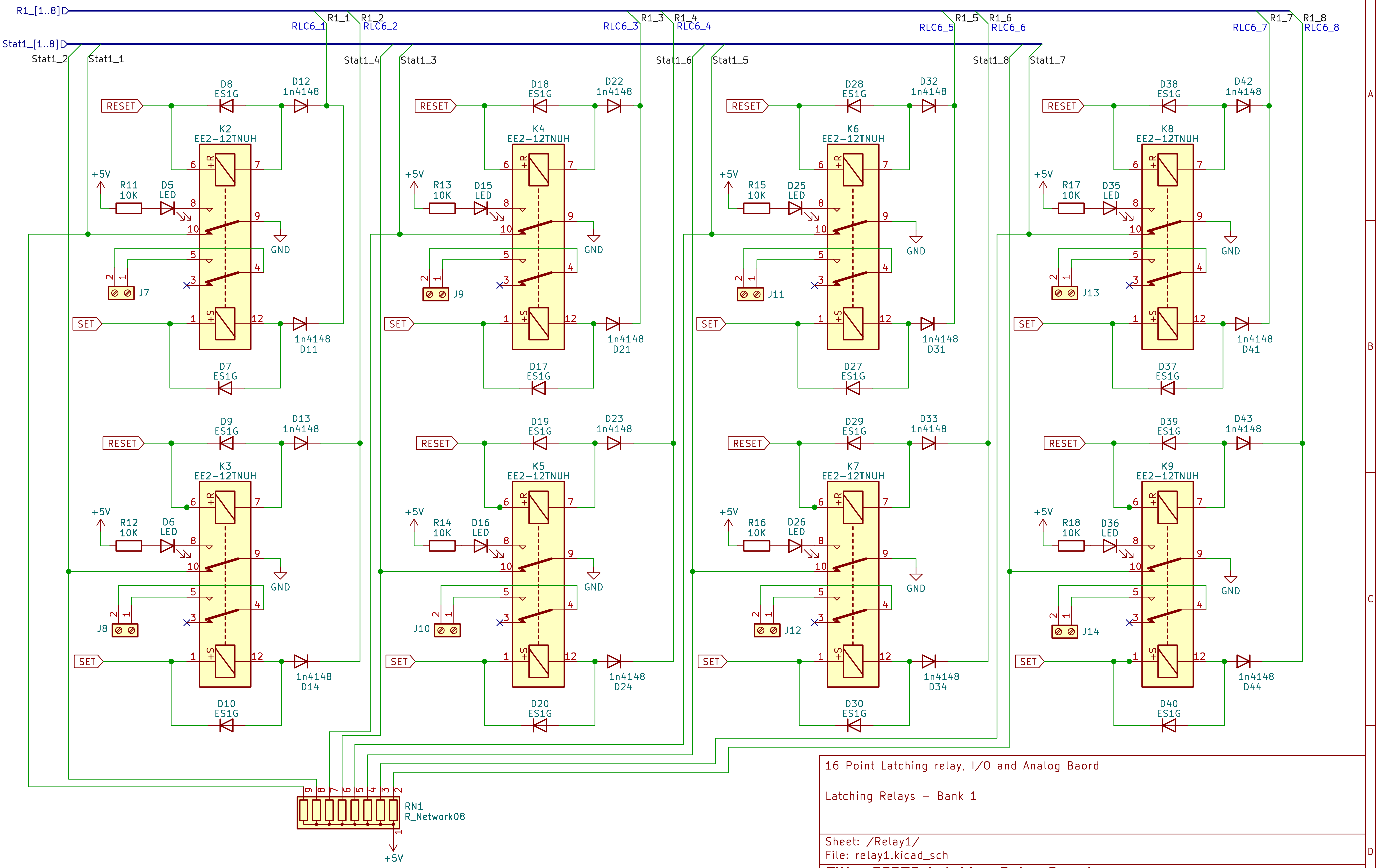
R1_[1..8]
Stat1_[1..8]
R1_1
R1_2
RLC6_1
RLC6_2
R1_3
R1_4
RLC6_3
RLC6_4
R1_5
R1_6
RLC6_5
RLC6_6
R1_7
R1_8
RLC6_7
RLC6_8
Stat1_2
Stat1_1
Stat1_4
Stat1_3
Stat1_6
Stat1_5
Stat1_8
Stat1_7
RESET
D8
ES1G
D12
1n4148
K2
EE2-12TNUH
6
7
+R
+5V
R11
10K
D5
LED
8
9
10
GND
5
4
2
1
3
J7
SET
1
+S
12
1n4148
D11
D7
ES1G
RESET
D9
ES1G
D13
1n4148
K3
EE2-12TNUH
+5V
R12
10K
D6
LED
J8
SET
1n4148
D14
D10
ES1G
RESET
D18
ES1G
D22
1n4148
K4
EE2-12TNUH
+5V
R13
10K
D15
LED
J9
SET
1n4148
D21
D17
ES1G
RESET
D19
ES1G
D23
1n4148
K5
EE2-12TNUH
+5V
R14
10K
D16
LED
J10
SET
1n4148
D24
D20
ES1G
RESET
D28
ES1G
D32
1n4148
K6
EE2-12TNUH
+5V
R15
10K
D25
LED
J11
SET
1n4148
D31
D27
ES1G
RESET
D29
ES1G
D33
1n4148
K7
EE2-12TNUH
+5V
R16
10K
D26
LED
J12
SET
1n4148
D34
D30
ES1G
RESET
D38
ES1G
D42
1n4148
K8
EE2-12TNUH
+5V
R17
10K
D35
LED
J13
SET
1n4148
D41
D37
ES1G
RESET
D39
ES1G
D43
1n4148
K9
EE2-12TNUH
+5V
R18
10K
D36
LED
J14
SET
1n4148
D44
D40
ES1G
9
8
7
6
5
4
3
2
RN1
R_Network08
1
+5V

16 Point Latching relay, I/O and Analog Baord

Latching Relays – Bank 1

Sheet: /Relay1/
File: relay1.kicad_sch

Title: ESP32 Latching Relay Board

Size: A4	Date: 2023-05-08	**Rev: 1.0**
KiCad E.D.A. kicad 7.0.6		Id: 2/4

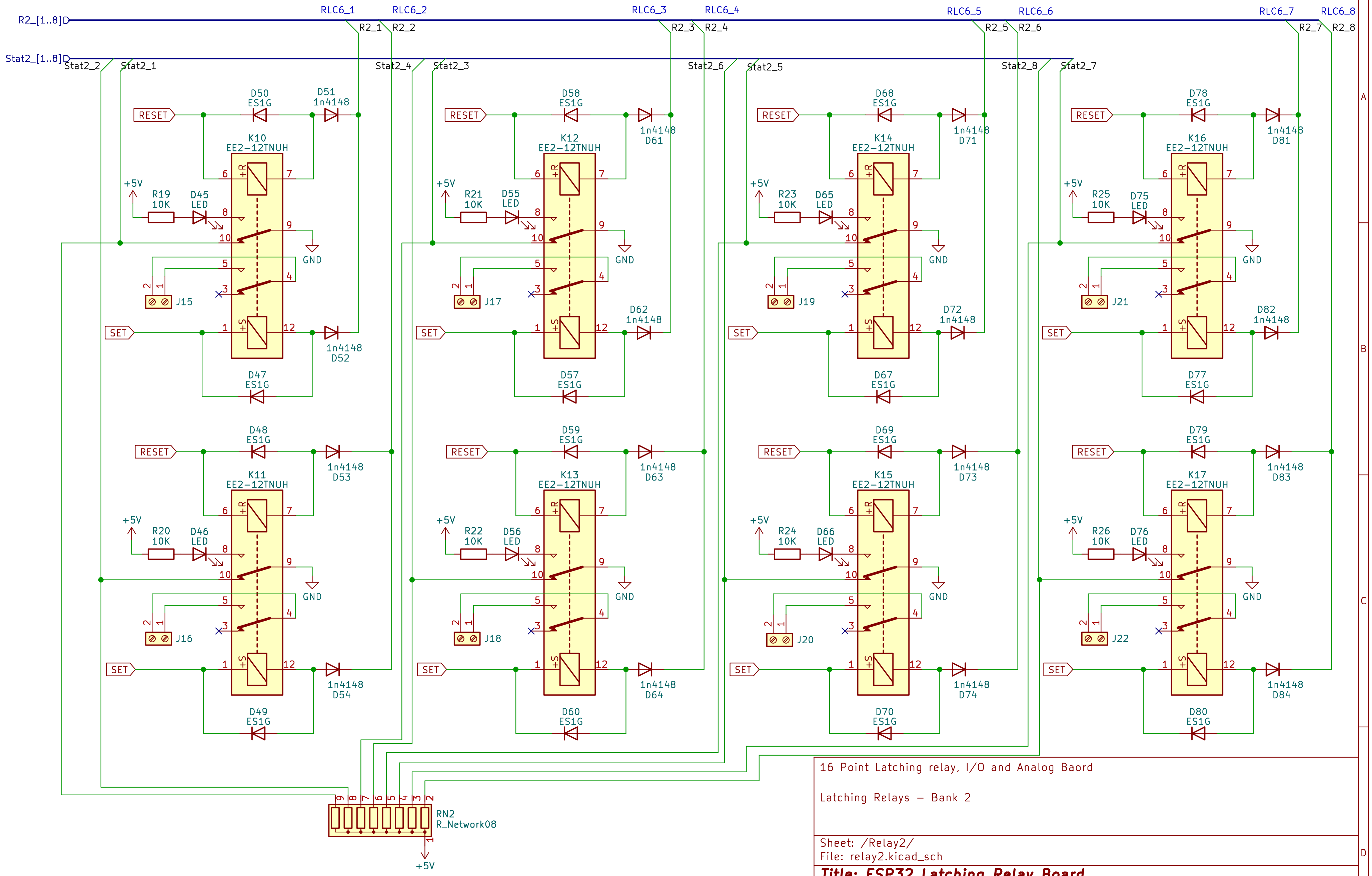

R2_[1..8]
Stat2_[1..8]
RLC6_1
RLC6_2
RLC6_3
RLC6_4
RLC6_5
RLC6_6
RLC6_7
RLC6_8
R2_1
R2_2
R2_3
R2_4
R2_5
R2_6
R2_7
R2_8
Stat2_1
Stat2_2
Stat2_3
Stat2_4
Stat2_5
Stat2_6
Stat2_7
Stat2_8
RESET
SET
+5V
GND
K10 EE2-12TNUH
K11 EE2-12TNUH
K12 EE2-12TNUH
K13 EE2-12TNUH
K14 EE2-12TNUH
K15 EE2-12TNUH
K16 EE2-12TNUH
K17 EE2-12TNUH
D50 ES1G
D51 1n4148
D47 ES1G
D52 1n4148
D48 ES1G
D53 1n4148
D49 ES1G
D54 1n4148
D58 ES1G
D61 1n4148
D57 ES1G
D62 1n4148
D59 ES1G
D63 1n4148
D60 ES1G
D64 1n4148
D68 ES1G
D71 1n4148
D67 ES1G
D72 1n4148
D69 ES1G
D73 1n4148
D70 ES1G
D74 1n4148
D78 ES1G
D81 1n4148
D77 ES1G
D82 1n4148
D79 ES1G
D83 1n4148
D80 ES1G
D84 1n4148
R19 10K
D45 LED
R20 10K
D46 LED
R21 10K
D55 LED
R22 10K
D56 LED
R23 10K
D65 LED
R24 10K
D66 LED
R25 10K
D75 LED
R26 10K
D76 LED
J15
J16
J17
J18
J19
J20
J21
J22
RN2
R_Network08

16 Point Latching relay, I/O and Analog Baord

Latching Relays – Bank 2

Sheet: /Relay2/
File: relay2.kicad_sch

Title: ESP32 Latching Relay Board

Size: A4
Date: 2023-05-08
Rev: 1.0
KiCad E.D.A. kicad 7.0.6
Id: 3/4

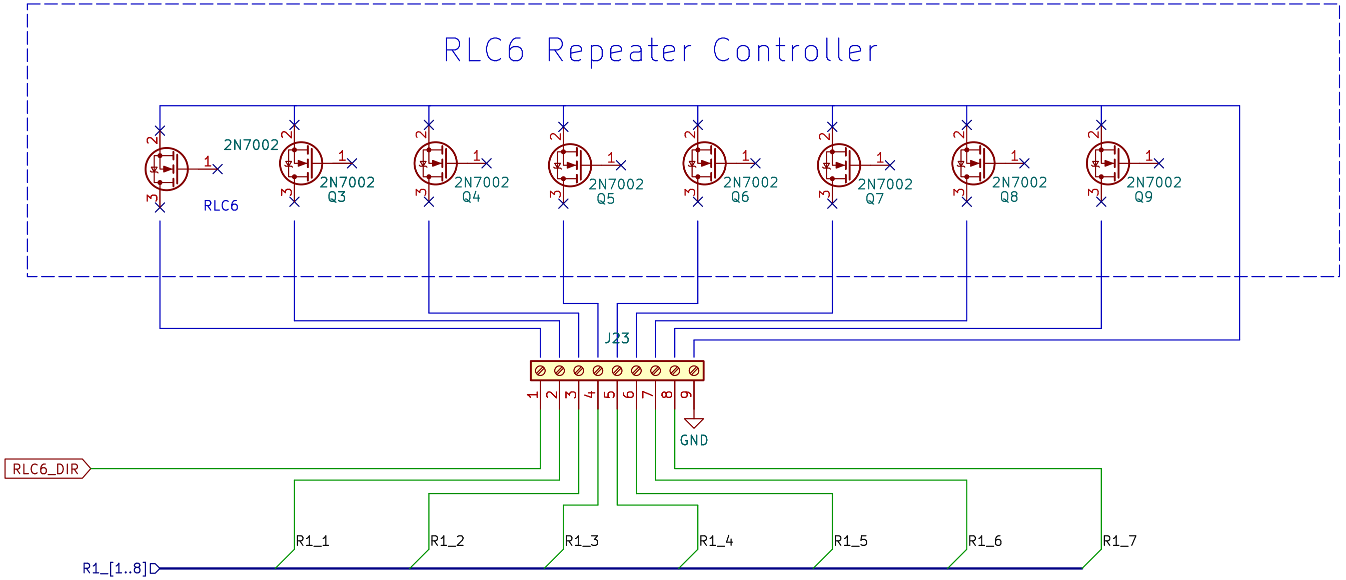
RLC6 Repeater Controller
2N7002
RLC6
2N7002
Q3
2N7002
Q4
2N7002
Q5
2N7002
Q6
2N7002
Q7
2N7002
Q8
2N7002
Q9
J23
1 2 3 4 5 6 7 8 9
GND
RLC6_DIR
R1_1
R1_2
R1_3
R1_4
R1_5
R1_6
R1_7
R1_[1..8]

Operation

Latching relays are toggled by either the RLC6 (only 1-7) or the ESP32.
To toggle a relay, follow this logic:

1) Energize the DIRECTION relay to SET or leave off to RESET
2) Wait 100ms
3) Energize the latching relay
4) Wait 100ms
5) De-energize the latching relay and the DIRECTION relay if on.

Terminal block J5 is meant for GPIO inputs, the ESP32 has internal pullups.

The ADS1115 has 4 16bit analog inputs available for general use. The default I2C address is 0x48H

Header strip J6 brings spare I/O from the ESP32 out and may be used in accordence with the Doit V1 spec.

Note:

If ADS1115 analog board is not populated add 4.7k I2C pullup resistors, see page 1.

16 Point Latching relay, I/O and Analog Baord

RCL6 Connections and Operation

Sheet: /RLC6/
File: rlc6.kicad_sch

Title: ESP32 Latching Relay Board

Size: A4 Date: 2023-05-08 **Rev: 1.0**
KiCad E.D.A. kicad 7.0.6 Id: 4/4