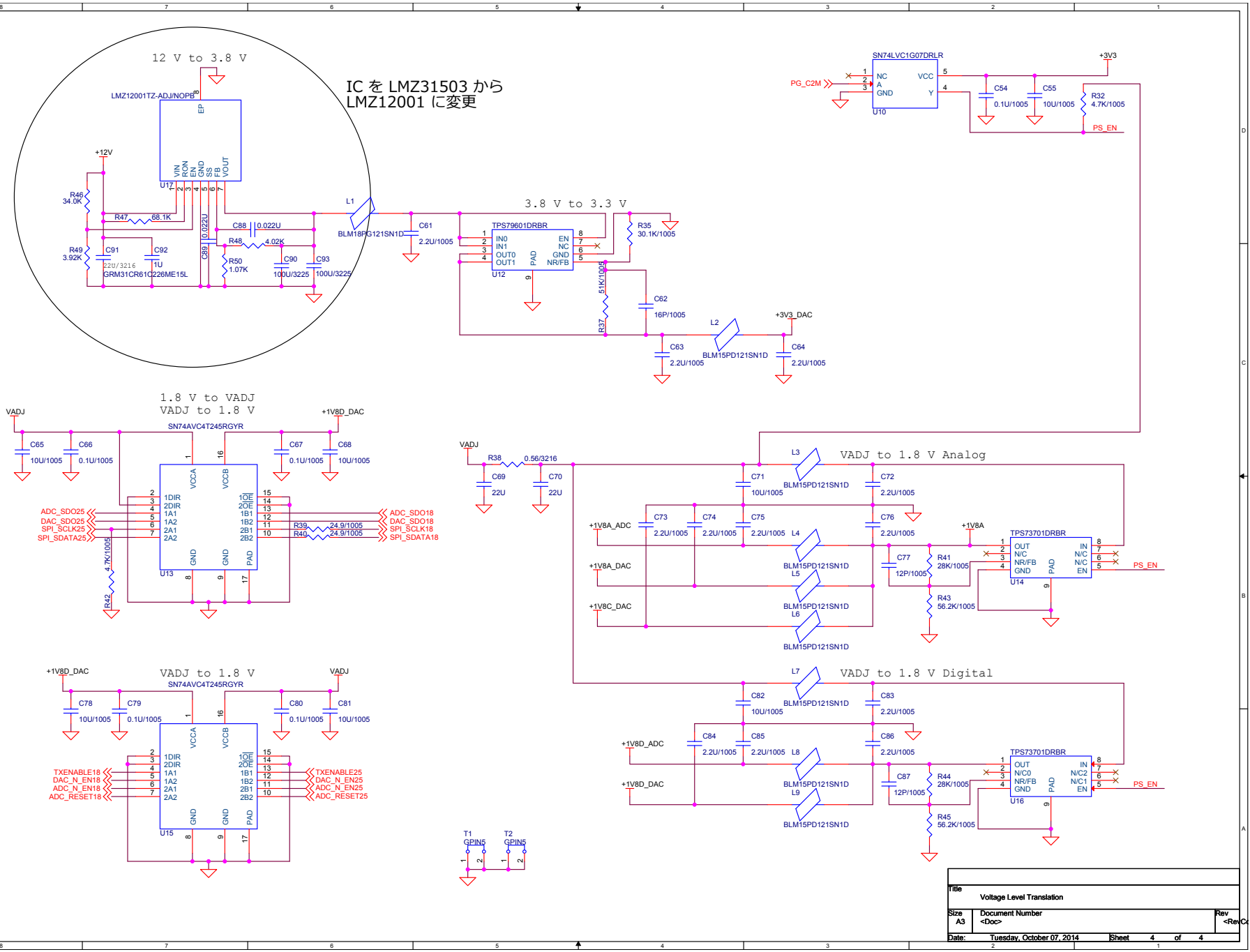
12 V to 3.8 V
IC を LMZ31503 から
LMZ12001 に変更
LMZ12001TZ-ADJ/NOPB
U17
+12V
R46 34.0K
R47 68.1K
R49 3.92K
C91 22U/3216 GRM31CR61C226ME15L
C92 1U
C88 0.022U
C89 0.022U
R48 4.02K
R50 1.07K
C90 100U/3225
C93 100U/3225
L1 BLM18PG121SN1D
C61 2.2U/1005
3.8 V to 3.3 V
TPS79601DRBR
U12
R35 30.1K/1005
R37 51K/1005
C62 16P/1005
L2 BLM15PD121SN1D
+3V3_DAC
C63 2.2U/1005
C64 2.2U/1005
SN74LVC1G07DRLR
U10
PG_C2M
+3V3
C54 0.1U/1005
C55 10U/1005
R32 4.7K/1005
PS_EN
1.8 V to VADJ
VADJ to 1.8 V
SN74AVC4T245RGYR
U13
VADJ
+1V8D_DAC
C65 10U/1005
C66 0.1U/1005
C67 0.1U/1005
C68 10U/1005
ADC_SDO25
DAC_SDO25
SPI_SCLK25
SPI_SDATA25
ADC_SDO18
DAC_SDO18
SPI_SCLK18
SPI_SDATA18
R39 24.9/1005
R40 24.9/1005
R42 4.7K/1005
VADJ to 1.8 V
SN74AVC4T245RGYR
U15
+1V8D_DAC
VADJ
C78 10U/1005
C79 0.1U/1005
C80 0.1U/1005
C81 10U/1005
TXENABLE18
DAC_N_EN18
ADC_N_EN18
ADC_RESET18
TXENABLE25
DAC_N_EN25
ADC_N_EN25
ADC_RESET25
T1 GPIN5
T2 GPIN5
VADJ
R38 0.56/3216
C69 22U
C70 22U
VADJ to 1.8 V Analog
L3 BLM15PD121SN1D
C71 10U/1005
C72 2.2U/1005
C73 2.2U/1005
C74 2.2U/1005
C75 2.2U/1005
C76 2.2U/1005
+1V8A_ADC
+1V8A_DAC
+1V8C_DAC
L4 BLM15PD121SN1D
L5 BLM15PD121SN1D
L6 BLM15PD121SN1D
+1V8A
TPS73701DRBR
U14
C77 12P/1005
R41 28K/1005
R43 56.2K/1005
PS_EN
VADJ to 1.8 V Digital
L7 BLM15PD121SN1D
C82 10U/1005
C83 2.2U/1005
C84 2.2U/1005
C85 2.2U/1005
C86 2.2U/1005
+1V8D_ADC
+1V8D_DAC
L8 BLM15PD121SN1D
L9 BLM15PD121SN1D
TPS73701DRBR
U16
C87 12P/1005
R44 28K/1005
R45 56.2K/1005
PS_EN
Title
Voltage Level Translation
Size A3
Document Number <Doc>
Rev <RevCo
Date: Tuesday, October 07, 2014
Sheet 4 of 4