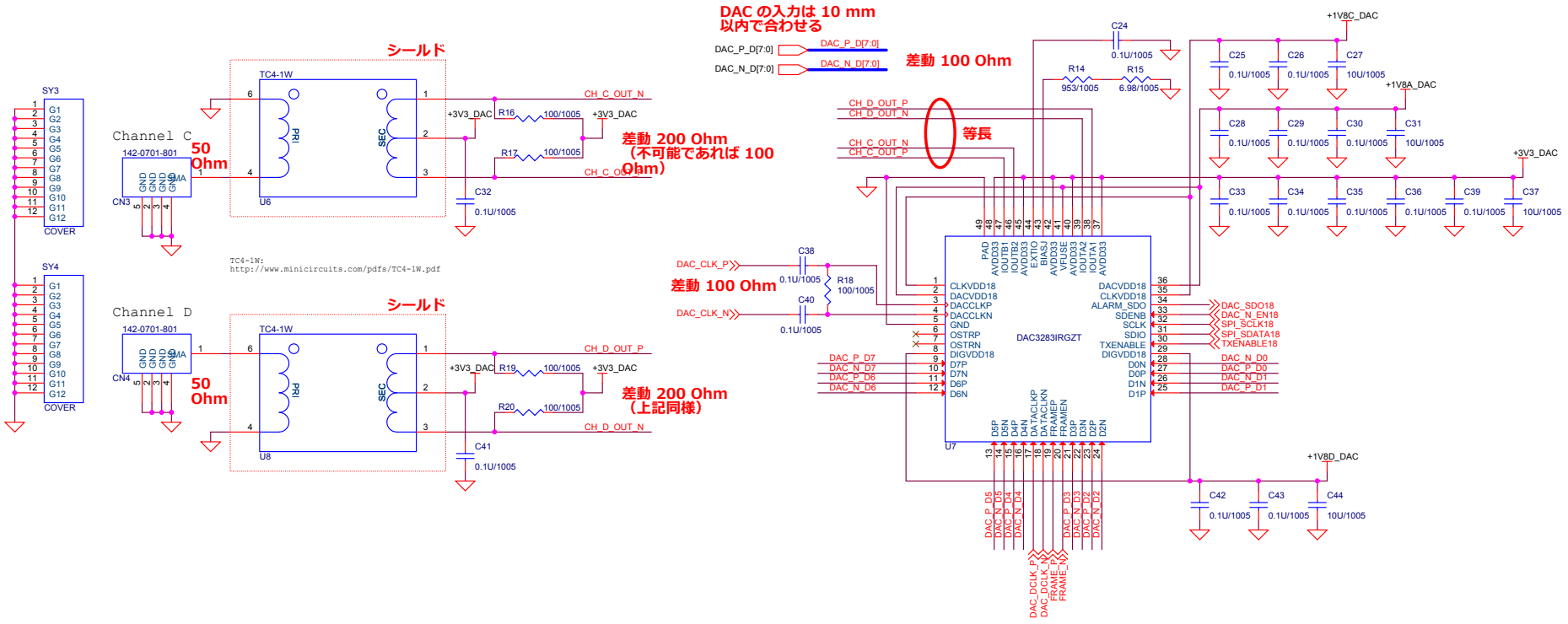

Title	Digital to Analog		
Size A3	Document Number <Doc>		Rev <RevCo
Date: Tuesday, October 07, 2014		Sheet 2 of 4	