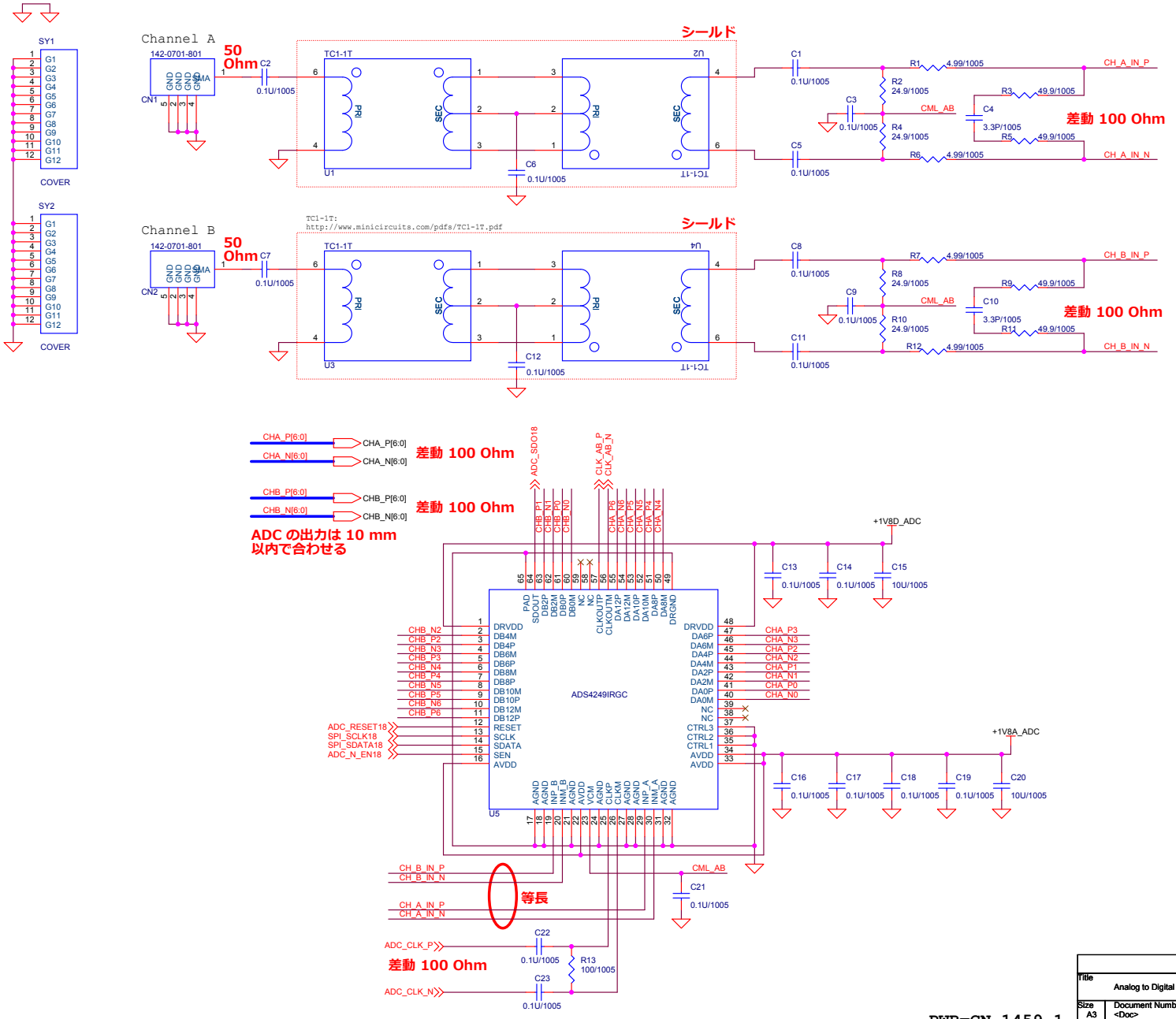

PWB=GN-1459-1

Title	Analog to Digital	
Size A3	Document Number <Doc>	Rev <RevCo
Date: Tuesday, October 07, 2014	Sheet 1 of 4	