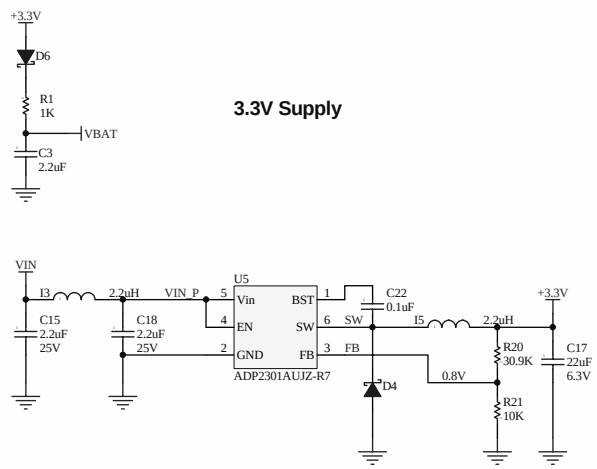

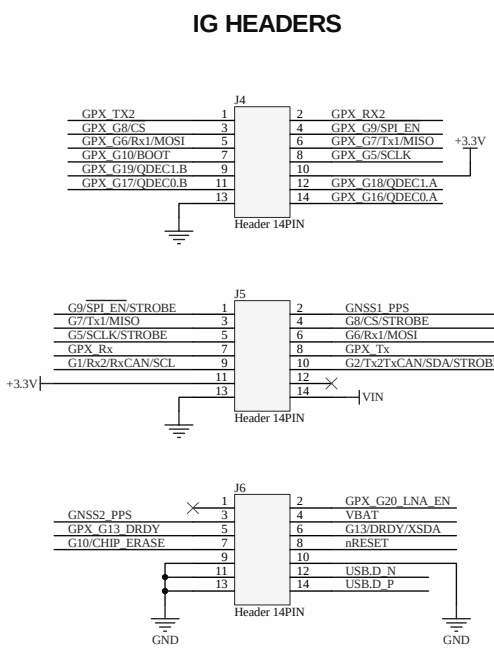

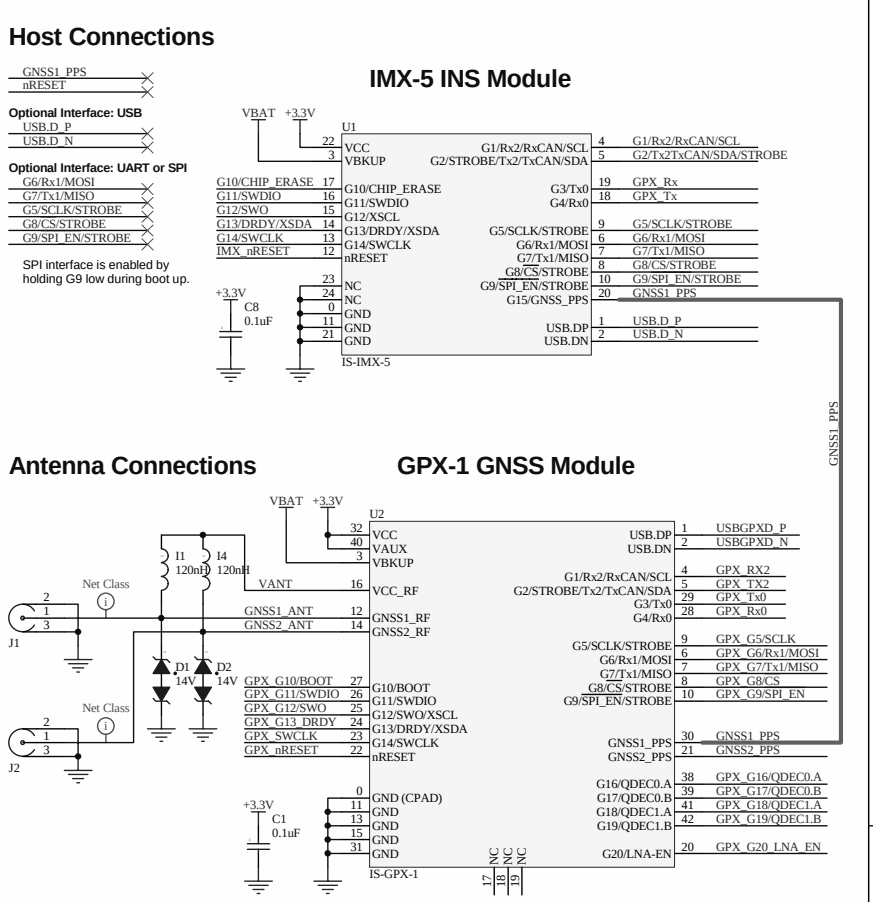

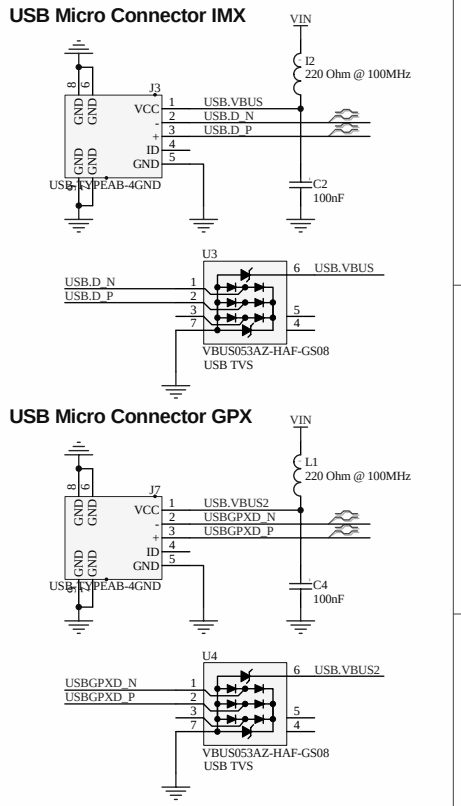

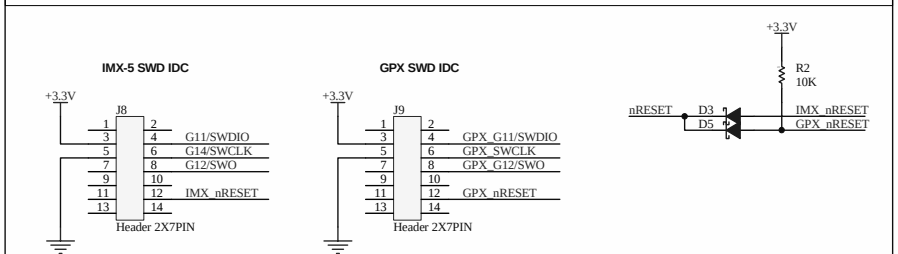

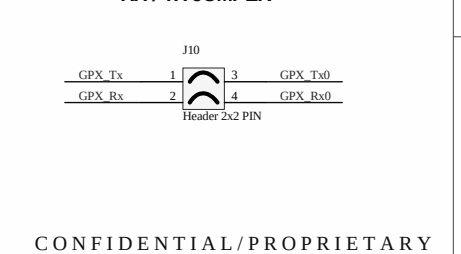

CONFIDENTIAL/PROPRIETARY

Project	*IMX w/ GPX Module*	PCB	IS-IG-r2.0-BRK
Sheet	**Connectors**	Assy	Variant name is not interpreted until output
Date 7/19/2024	Time 10:40:06 AM	Sheet 1 of 6	Size B
File	C:\Sproj\IS_IG-2\Main.SchDoc		

InertialSense
3000 S. Sierra Vista Way
Provo, UT 84606
info@inertialsense.com