3.3V Supply

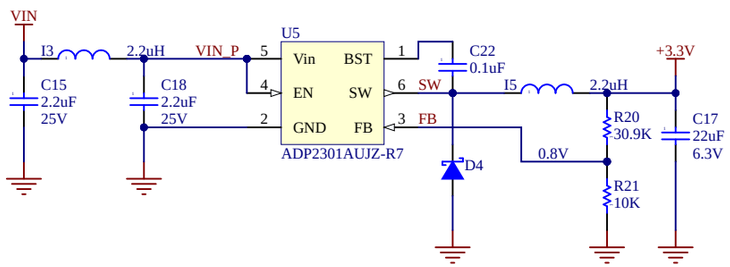

IG LGA Pads

Pins 1-14 assignments must match on U4 and H1

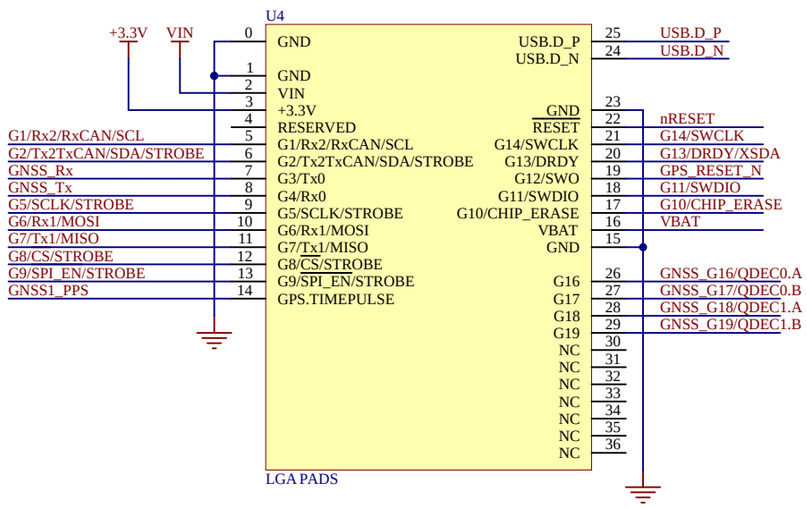

Host Connections

GNSS1_PPS
nRESET

Optional Interface: USB
USB.D_P
USB.D_N

Optional Interface: UART or SPI
G6/Rx1/MOSI
G7/Tx1/MISO
G5/SCLK/STROBE
G8/CS/STROBE
G9/SPI_EN/STROBE

SPI interface is enabled by holding G9 low during boot up.

IMX-5 INS Module

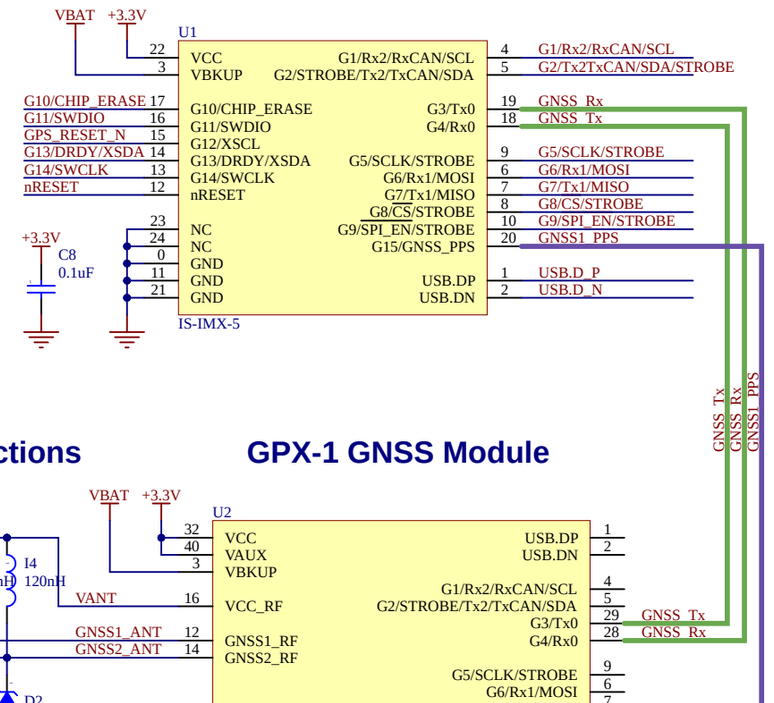

Antenna Connections

GPX-1 GNSS Module

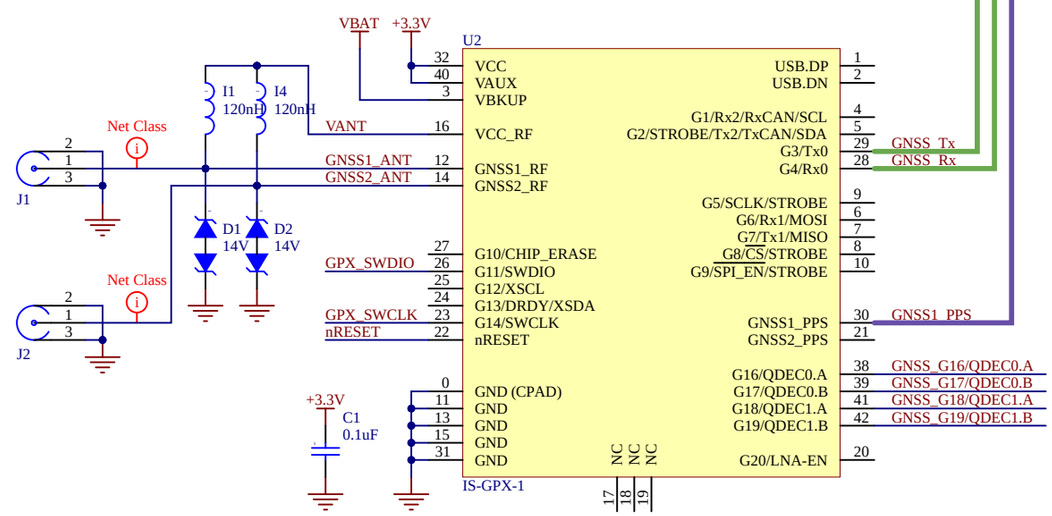

IMX-5 SWD IDC

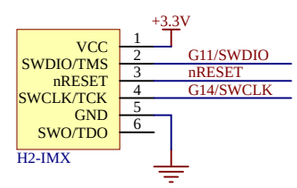

GPX SWD IDC

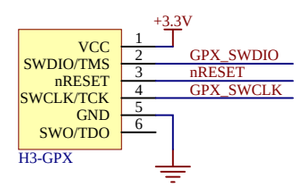

USB Micro Connector

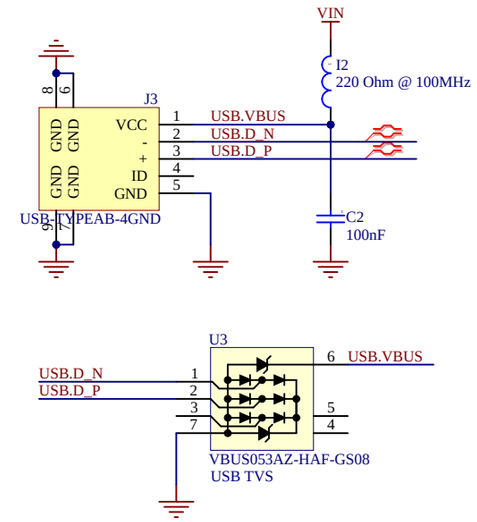

IMX-5 I/O Header

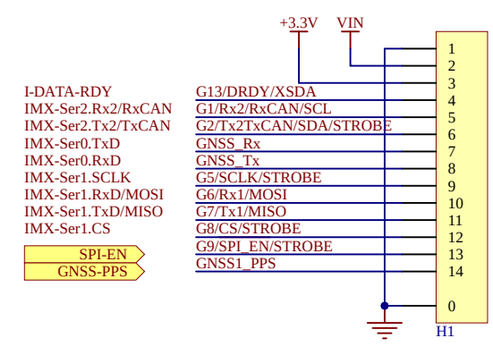

CONFIDENTIAL/PROPRIETARY

Project	*IMX w/ RTK-GNSS Module*	PCB	IS-IG-r2.0
Sheet	**Connectors**	Assy	IS-IG-r2.0.0.1
Date 12/22/2022	Time 7:21:51 PM	Sheet 1 of 6	Size B
File	C:_IS\hdw\IS-hdw\Products\IG-2-0\Altium\Source Files\Main.SchDoc		

InertialSense
3000 S. Sierra Vista Way
Provo, UT 84606
info@interialsense.com