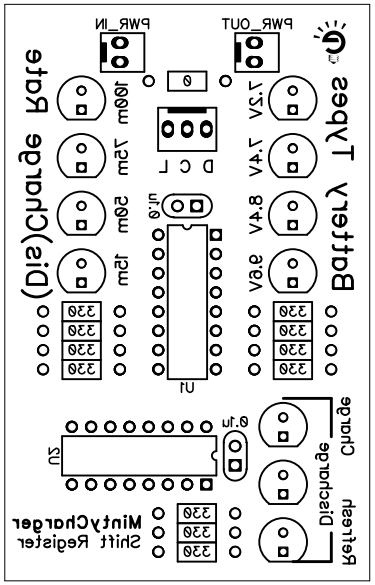

Title		
MintyCharger		
	Notes	Rev
	Shift Register Module	A
Date: 2020-08-04	Innove Workshop	
Nathan Campos	Sheet 1/1	