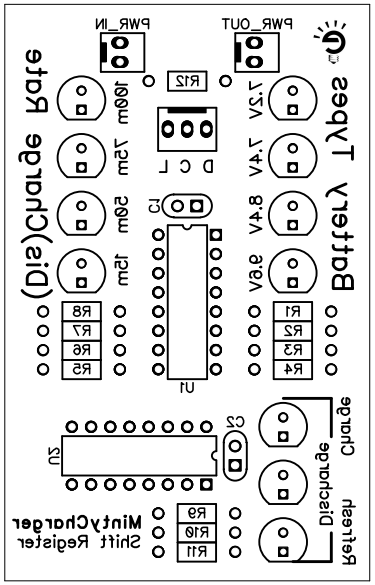

Title		
MintyCharger		
	Notes	Rev
	Shift Register Module	A
Date: 2020-08-04		Innove Workshop
Nathan Campos		Sheet 1/1