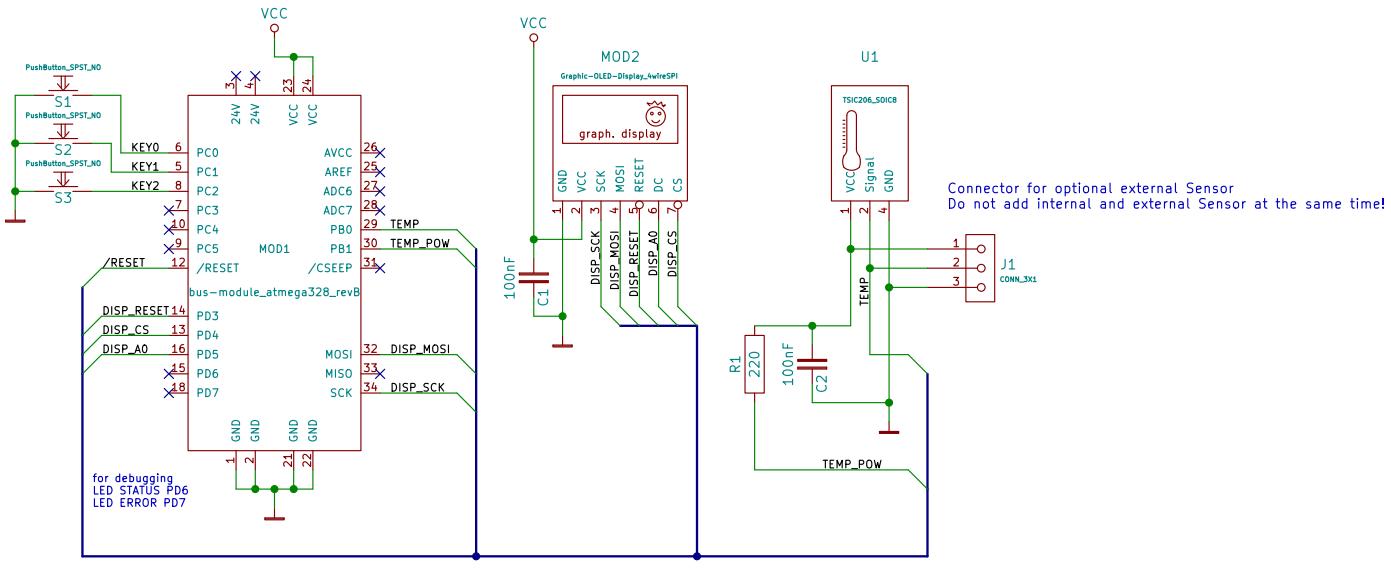

koewiba

Sheet: /

File: roomthermostat.kicad_sch

Title: roomthermostat

Size: A4	Date: 2023-10-14	**Rev: C**
KiCad E.D.A. kicad 6.0.2+dfsg-1		Id: 1/1