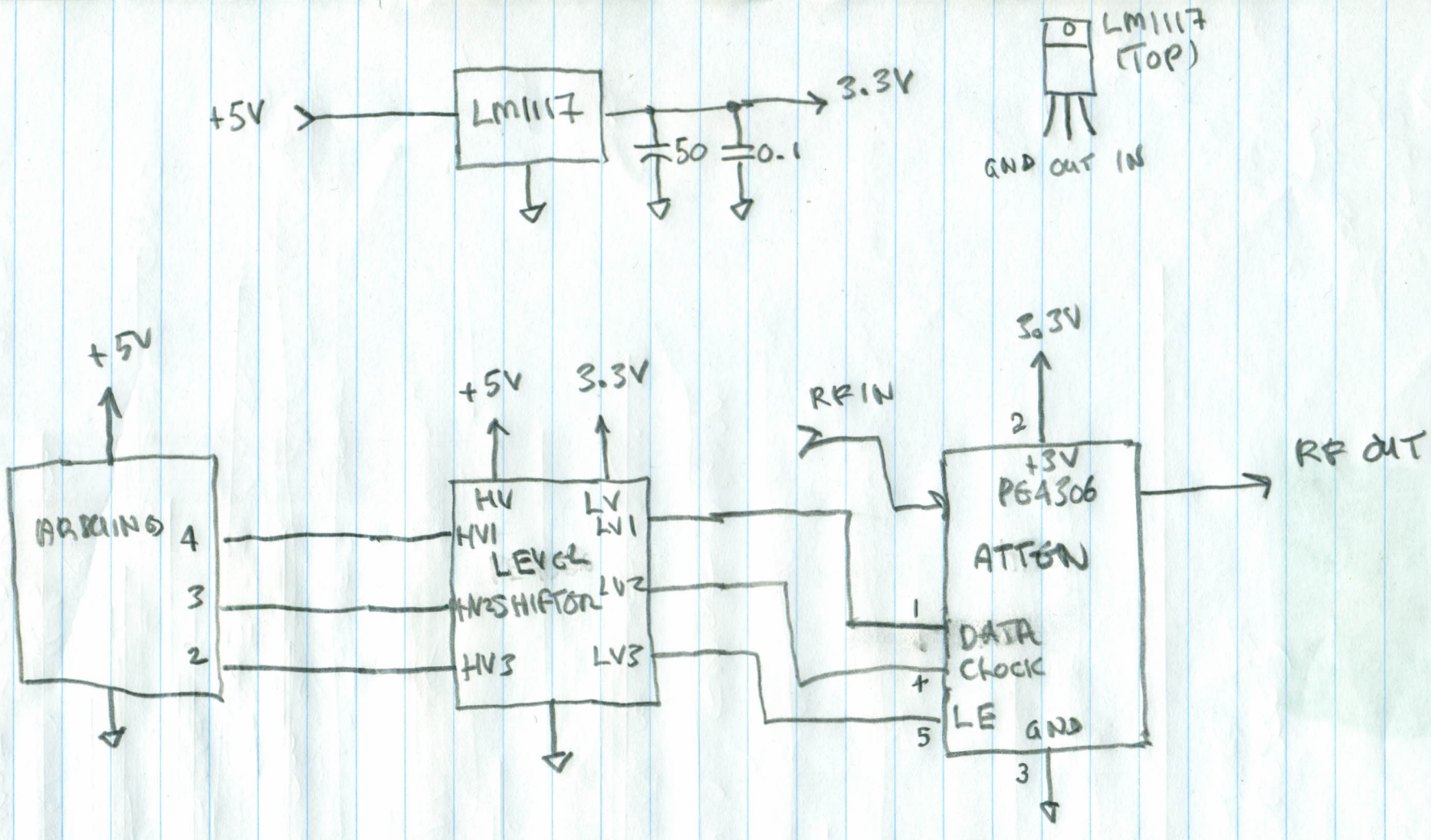


+30 dBm MAX INPUT
(20V P-P, 1W)