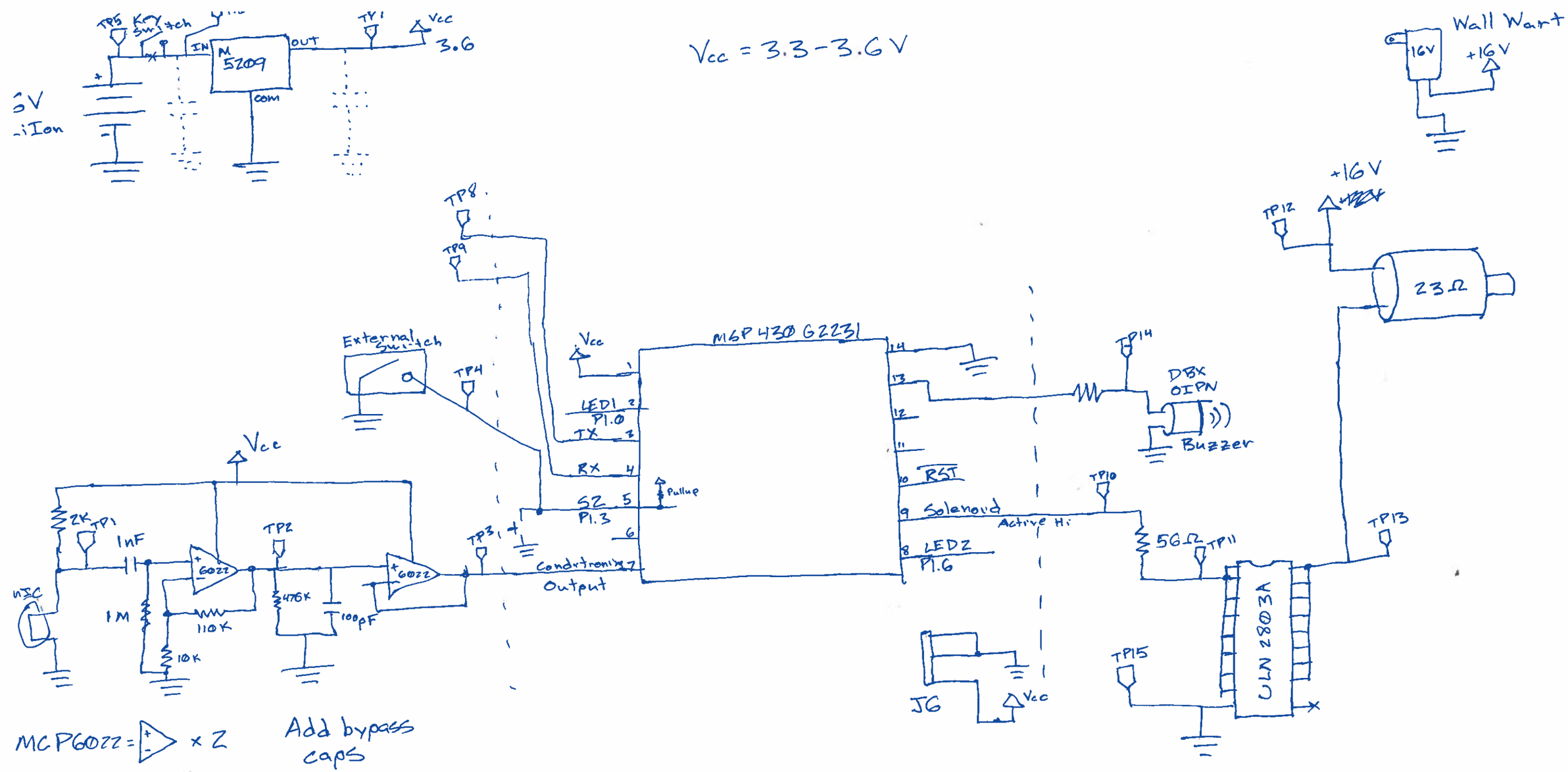

- Keep jumpers accessible when boards are mated.

DBX-OIPN
+1.5 V
6.5 Ω
Rated 70 mA