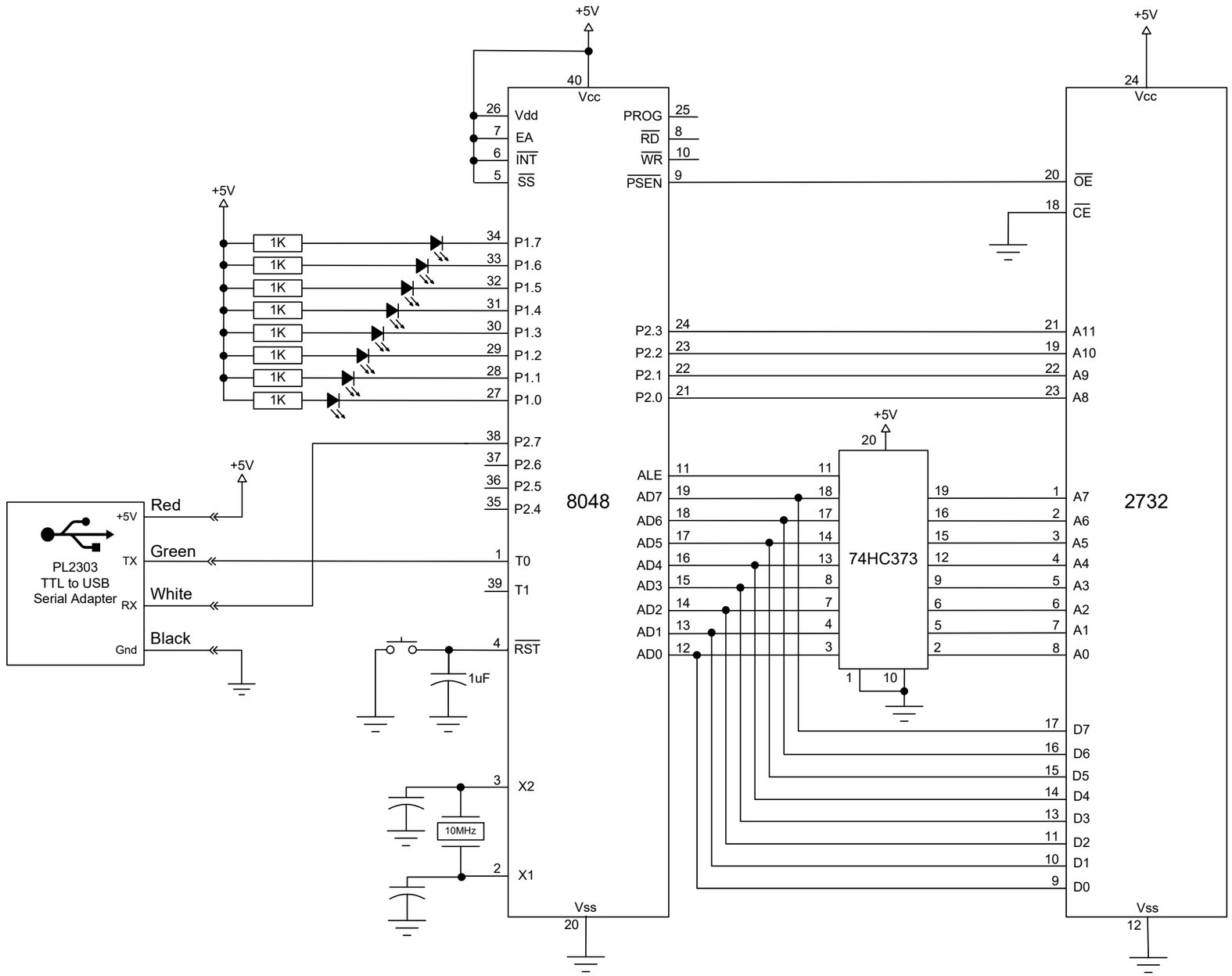

8048 SBC

Drawn by: jsl

Date: