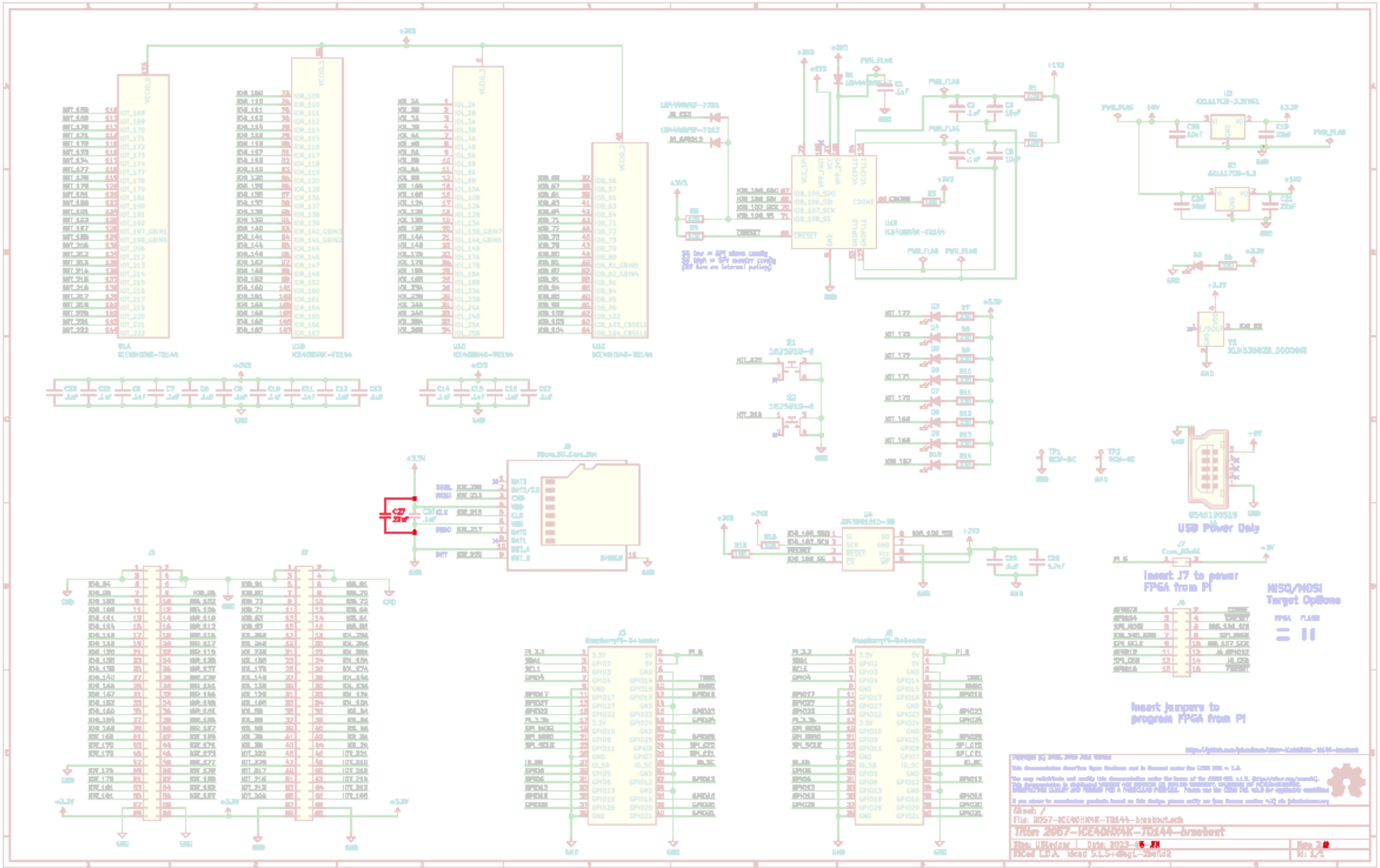
USB Power Only
Insert J7 to power FPGA from Pi
MISO/MOSI Target Options
Insert jumpers to program FPGA from Pi
Sheet 1
File: 2057-ICE40HX4K-TQ144-breakout.sch
Title: 2057-ICE40HX4K-TQ144-breakout