The Hybrid Model: A New Pharmacokinetic Model for Computer-Controlled Infusion Pumps

D. Russell Wada and Denham S. Ward, *Member, IEEE*

***Abstract*—Classical pharmacokinetic models used in computer-controlled infusion pumps (CCIPs) assume instantaneous mixing of drug in blood; however, the average recirculation time of blood in man is approximately one minute. To investigate the effects of recirculation dynamics on the transient performance of CCIPs, we propose a hybrid physiologically-based pharmacokinetic model for the narcotic alfentanil. A three-compartment model was derived from the response of the hybrid model to a short infusion and used to compute a CCIP infusion targeting 450 μg/l. For this infusion, the hybrid model predicts that the arterial plasma concentration will overshoot the target concentration by 39 percent with an average prediction error of 3 percent. The overshoot and average prediction error increase to 100 and 25 percent respectively when using a three-compartment pharmacokinetic model derived from a bolus. The overshoot can be reduced by decreasing the maximum possible infusion rate, or by increasing the zero-order hold infusion interval.**

I. Introduction

PHARMACOKINETIC models of intravenous drugs provide the anesthesiologist with a tool to predict the disposition of drug in the body. The model can be used to design a drug infusion that, in theory, would drive the plasma drug concentration to a specified setpoint. The setpoint is the drug concentration deemed by the anesthesiologist to be just sufficient to achieve the desired pharmacologic effect. A properly titrated setpoint ensures that the patient receives the minimum therapeutic dose providing the least chance of toxicity and the fastest emergence from anesthesia. Most intravenous drugs are characterized by a two or three-compartment pharmacokinetic model, so computing the ideal infusion necessitates solving a system of ordinary differential equations [1]–[4]. Computer-controlled infusion pumps (CCIPs) are required to implement the complex infusion scheme and are of current clinical interest [5]–[8].

Multi-compartment pharmacokinetic models used in CCIPs make the following two assumptions: all plasma resides in the central compartment, and drug entering the body mixes instantaneously throughout the central compartment volume. At the beginning of regular control intervals between 9 and 15 seconds [5], [6], [8], [9], the CCIP first updates the drug concentration in the central compartment based upon the past infusion history, and then calculates the zero-order infusion that will drive the drug concentration in the central compartment to the desired setpoint by the beginning of the next time interval. However, drugs do not mix instantaneously within plasma [10], because the recirculation time of blood is on the order of one minute (the ratio of blood volume to cardiac output is approximately one minute [11]). CCIP systems are thus operating at control intervals which are inconsistent with the assumption of instantaneous mixing.

Understanding the effects of recirculation dynamics requires a model which is a better representation of reality. Physiologically-based pharmacokinetic models are an appropriate framework; they rely upon the anatomical relation of tissues to the circulating blood, and on underlying physiological parameters such as tissue blood flows and masses [12], [13]. Because typical physiological pharmacokinetic models attempt to simulate concentrations in a large number of tissues, and we are only interested in plasma concentrations, we have adopted a model reduction philosophy known in the pharmacokinetic literature as "hybrid" modeling [13], [14]. After developing and validating the hybrid model for the intravenous narcotic alfentanil, we simulated the transient response of the hybrid model using a typical CCIP infusion and explored several approaches to improve CCIP performance.

II. The Hybrid Model

Body tissues of the hybrid model are modeled as variations of the two-compartment physiological flow model illustrated in Fig. 1. Drug enters the capillary blood at concentration c_{in} in blood flowing at rate $\dot{Q}_{\text{in}}$. The drug either leaves the subsystem in blood or is removed irreversibly from the body by clearance mechanisms. Drug can diffuse reversibly within the subsystem across capillary walls into the tissue compartment. The drug is assumed to mix instantaneously throughout a compartment upon entry, so the exit concentration, c_{out}, is equal to the concentration of drug in the capillary blood. The exit flow rate of blood, $\dot{Q}_{\text{out}}$, is equal to the input flow rate, $\dot{Q}_{\text{in}}$.

The apparent volume of a compartment, V, is the steady state ratio of the drug mass in the compartment to the arterial blood concentration of drug. For compartments composed solely of blood, V is the physical volume of the compartment. If, for example, the compartment contains tissue which binds readily with the drug, then the apparent volume will be larger than the physical volume. The rate of removal of drug from a compartment is the product of the clearance (Cl) and the concentration of drug in the compartment. Clearance can be thought of as the volume within a compartment that

Manuscript received May 27, 1992; revised September 9, 1993.

D. R. Wada is with the Stanford University School of Medicine, Department of Anesthesia, Palo Alto, CA 94305. He was formerly with the Departments of Anesthesiology and Electrical Engineering, University of California at Los Angeles, Los Angeles, CA 90024.

D. S. Ward is with the University of Rochester Medical Center, Dept. of Anesthesiology, Rochester, NY 14642.

IEEE Log Number 9213869.

0018-9294/94$04.00 © 1994 IEEE

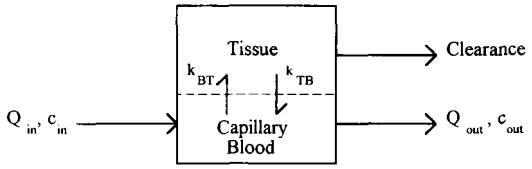

Fig. 1. The basic physiological modeling block for tissues or organs. Blocks consist of a capillary blood volume compartment adjoined to a tissue compartment. The half arrows denote reversible membrane diffusion processes. Q denotes blood flow, and c represents drug concentration.

is completely cleared of drug per unit time. The rate of reversible mass transfer from compartment i to compartment j is assumed to be proportional to the concentration gradient between compartments i and j. The proportionally constant, Cl_{ij} is also a clearance, with units of volume per unit time. The general mass balance relationship for the subsystem in Fig. 1 is

$$\dot{x}_{\mathrm{B}} = -\dot{Q}_{\mathrm{out}} c_{\mathrm{B}} - Cl_{\mathrm{BT}}(c_{\mathrm{B}} - c_{\mathrm{T}}) + \dot{Q}_{\mathrm{in}} c_{\mathrm{in}}, \tag{1}$$

$$\dot{x}_{\mathrm{T}} = -Cl \cdot c_{\mathrm{T}} + Cl_{\mathrm{BT}}(c_{\mathrm{B}} - c_{\mathrm{T}}), \tag{2}$$

where x denotes mass, c denotes concentration, and the subscripts B and T refer to blood and tissue respectively. By defining the rate constants $k_{\mathrm{BT}} = Cl_{\mathrm{BT}}/V_{\mathrm{B}}$, and $k_{\mathrm{TB}} = Cl_{\mathrm{BT}}/V_{\mathrm{T}}$, and using the relationships $c_{\mathrm{B}} = x_{\mathrm{B}}/V_{\mathrm{B}}$ and $c_{\mathrm{T}} = x_{\mathrm{T}}/V_{\mathrm{T}}$, equations (1) and (2) can be rewritten in state space notation as

$$\dot{x}_{\mathrm{B}} = -\left(\frac{\dot{Q}_{\mathrm{out}}}{V_{\mathrm{B}}} - k_{\mathrm{BT}}\right) x_{\mathrm{B}} + k_{\mathrm{TB}}\, x_{\mathrm{T}} + \dot{Q}_{\mathrm{in}} c_{\mathrm{in}}, \tag{3}$$

$$\dot{x}_{\mathrm{T}} = k_{\mathrm{BT}} x_{\mathrm{B}} - \left(\frac{Cl}{V_{\mathrm{T}}} + k_{\mathrm{TB}}\right) x_{\mathrm{T}}. \tag{4}$$

The output concentration of drug may be expressed as

$$c_{\mathrm{out}} = \frac{1}{V_{\mathrm{B}}}\, x_{\mathrm{B}}. \tag{5}$$

The full hybrid model comprises tissues and blood volumes positioned anatomically with respect to blood circulating with cardiac output $\dot{Q}$ (Fig. 2). Drug transport from a peripheral infusion site to the right heart chamber is not instantaneous, so an input delay T_{i} is included. A lung-tissue compartment accounts for the significant retention of drug during the first exposure of the drug to the pulmonary capillaries (between 36 and 80% for alfentanil [17]). The cardiopulmonary transport delay, T_{p}, models the transport time of the drug across the cardiopulmonary system. The sample delay, T_{s}, quantifies the transport delay between aortic arterial blood and a peripheral arterial sample site.

Drug enters the systemic capillary beds with an arterial blood concentration c_{ab}. The systemic organs are less important than the cardiopulmonary system with respect to predicting arterial concentrations, so the tissues are modeled as simple one-compartment models (the general model in Fig. 1, excluding the diffusion barrier). Systemic organs with relatively high perfusion and small apparent volume, such as the brain, liver, or kidney, are lumped into the vessel-rich group (VRG). Muscle and fat tissues are separated because

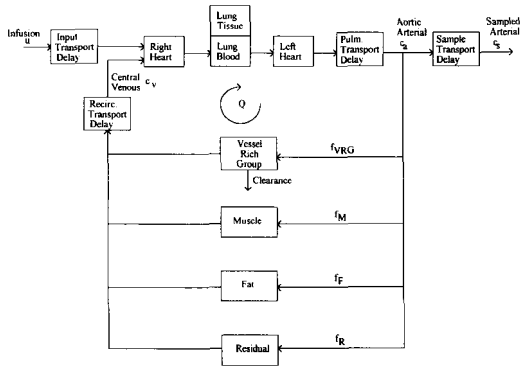

Fig. 2. The hybrid pharmacokinetic model. Peripherally administered intravenous drug enters the right heart chamber after an input transport delay, and merges with recirculating venous drug. Drug is reversibly extracted out of the lung capillaries into lung tissue, but reaches aortic arterial blood at concentration c_{a}. Arterial drug is delivered to the capillary beds of four systemic tissue groups with fractional flows $\dot{Q} f_{\mathrm{VRG}}, \dot{Q} f_{\mathrm{M}}, \dot{Q} f_{\mathrm{F}}$, and $\dot{Q} f_{\mathrm{R}}$. Peripherally sampled drug (c_{s}) lags the arterial concentration by the transport delay T_{s}. Irreversible elimination of drug is represented by Cl, and is assumed to occur from the vessel-rich group.

they have relatively low perfusions and large apparent volumes. A residual tissue incorporates the cardiac output and total body weight not accounted for by the VRG, muscle, and fat compartments. Regional blood flows are represented as fractions of cardiac output (*e.g.*, $f_{\mathrm{VRG}} \cdot \dot{Q}$). Clearance is assumed to occur via hepatic or renal mechanisms, hence drug is eliminated from the VRG subsystem.

The drug exiting the systemic organs empties into venous blood and reenters the cardiopulmonary system at a central venous concentration c_{vb}. The recirculation delay, T_{r}, is a lumped approximation of all arterial, capillary, and venous transport delays. Conceptually, T_{r} can be thought of as a tube containing arterial and venous blood through which drug is transported, without mixing, at a flow rate $\dot{Q}$.

To write the mathematical equations for the hybrid model, we define vectors of state variables which represent drug masses in either the cardiopulmonary subsystem (P) or the systemic subsystem (S),

$$x_{\mathrm{P}} = [x_{\mathrm{LH}} \quad x_{\mathrm{LB}} \quad x_{\mathrm{LT}} \quad x_{\mathrm{RH}}]^T, \tag{6}$$

$$x_{\mathrm{S}} = [x_{\mathrm{VRG}} \quad x_{\mathrm{M}} \quad x_{\mathrm{F}} \quad x_{\mathrm{R}}]^T, \tag{7}$$

where the subscripts LH, LB, LT, and RH refer to the left heart, lung blood, lung tissue, and right heart compartments respectively, and the superscript T denotes the transpose operation. Using (1)–(5), the system state equations are written as

$$\dot{x}_{\mathrm{P}} = A_{\mathrm{P}} x_{\mathrm{P}} + B_{\mathrm{P}}(\dot{Q} c_{\mathrm{vb}} + u(t - T_{\mathrm{i}})), \tag{8}$$

$$c_{\mathrm{ab}}(t) = C_{\mathrm{P}} x_{\mathrm{P}}(t - T_{\mathrm{P}}), \tag{9}$$

$$\dot{x}_{\mathrm{S}} = A_{\mathrm{S}} x_{\mathrm{S}} + B_{\mathrm{S}} \dot{Q} c_{\mathrm{ab}}, \tag{10}$$

$$c_{\mathrm{vb}}(t) = C_{\mathrm{S}} x_{\mathrm{S}}(t - T_{\mathrm{r}}), \tag{11}$$

$$c_{\mathrm{sb}}(t) = c_{\mathrm{ab}}(t - T_{\mathrm{s}}), \tag{12}$$

where the input infusion rate is u, the subscripts ab, vb, and sb refer to concentration measured in aortic blood, central venous

blood, and peripherally sampled arterial blood, and the state matrices are

$$A_P = \begin{bmatrix} -\frac{\dot{Q}}{V_{RH}} & 0 & 0 & 0 \\ \frac{\dot{Q}}{V_{RH}} & -\left(\frac{\dot{Q}}{V_{Lung}} + k_{LB,LT}\right) & k_{LT,LB} & 0 \\ 0 & k_{LB,LT} & -k_{LT,LB} & 0 \\ 0 & \frac{\dot{Q}}{V_{Lung}} & 0 & -\frac{\dot{Q}}{V_{LH}} \end{bmatrix}, \tag{13}$$

$$B_P = [1 \quad 0 \quad 0 \quad 0]^T, \tag{14}$$

$$C_P = \left[0 \quad 0 \quad 0 \quad \frac{1}{V_{LH}}\right], \tag{15}$$

$$A_S = \begin{bmatrix} -\frac{\dot{Q}f_{VRG} + Cl}{V_{VRG}} & 0 & 0 & 0 \\ 0 & -\frac{\dot{Q}f_M}{V_M} & 0 & 0 \\ 0 & 0 & -\frac{\dot{Q}f_F}{V_F} & 0 \\ 0 & 0 & 0 & -\frac{\dot{Q}f_R}{V_R} \end{bmatrix}, \tag{16}$$

$$B_S = [f_{VRG} \quad f_M \quad f_F \quad f_R]^T, \tag{17}$$

and

$$C_S = \left[\frac{f_{VRG}}{V_{VRG}} \quad \frac{f_M}{V_M} \quad \frac{f_F}{V_F} \quad \frac{f_R}{V_R}\right]. \tag{18}$$

Plasma concentrations of drug are calculated from (9), (11), and (12) using the blood-plasma partition coefficient ρ (the ratio of blood to plasma concentration of drug at steady state). Thus

$$c_a(t) = \frac{1}{\rho} c_{ab}(t), \tag{19}$$

$$c_s(t) = \frac{1}{\rho} c_{sb}(t), \tag{20}$$

$$c_v(t) = \frac{1}{\rho} c_{vb}(t). \tag{21}$$

Henceforth, all concentrations refer to plasma.

III. Hybrid Model Parameters

The opioid alfentanil is characterized by rapid onset and short duration of analgesic effect; it is a clinically relevant drug for computer-controlled infusion pumps [7], [9], [15], [16]. Data is available in the literature to determine parameters for a hybrid model of alfentanil, although scaling from rats to humans is required.

The cardiopulmonary parameters ($V_{RH}, V_{LH}, V_{Lung}, k_{LB,LT}$, and $k_{LT,LB}$) of the hybrid model were determined from the data for patient #3 of Taeger et al.[1], who examined the first-pass pulmonary uptake of fentanyl and alfentanil in humans [17]. Patient #3 received a 7.3-mg bolus of alfentanil over 4 seconds. By comparing the measured arterial concentrations with the simulated concentrations (c_s) prior to the recirculation of alfentanil (8), (9), (12), and (13), with c_{vb} and T_i set to zero), we estimated the cardiopulmonary parameters by minimizing a weighted sum of squares criterion. The weights were $(1/c_s)^2$. The parameter optimization was performed with a Nelder-Mead Simplex algorithm using MATLAB (The MathWorks Inc., Natick, MA), and the estimated cardiopulmonary parameters are summarized in Table I.

[1] Data obtained courtesy of K. Taeger.

TABLE I
Hybrid Pharmacokinetic Model Parameters for Alfentanil*

Variable	Description	Value (Units)
T_i	Input delay	5 (sec)
T_s	Sampling delay	5 (sec)
T_p	Pulmonary delay	5 (sec)
T_r	Recirculation delay	30 (sec)
Q	Cardiac Output	5.5 ($L \cdot min^{-1}$)
V_{RH}	Volume Right Heart blood	0.26 (L)
V_{Lung}	Volume Lung	0.45 (L)
V_{LH}	Volume Left Heart blood	0.26 (L)
$k_{LB,LT}$	Rate constant from lung blood to lung tissue	8.0 (min^{-1})
$k_{LT,LB}$	Rate constant from lung tissue to lung blood	2.3 (min^{-1})
V_{VRG}	Volume Vessel Rich Group	5.5 (L)
f_{VRG}	Flow fraction VRG	70 (%)
V_M	Volume Muscle	13.2 (L)
f_M	Flow fraction Muscle	5 (%)
V_F	Volume Fat	36.7 L
f_F	Flow fraction Fat	4 (%)
V_R	Volume Residual	14.9 (L)
f_R	Flow fraction Residual	21 (%)
Cl	Clearance	0.64 ($L \cdot min^{-1}$)
ρ	Blood-plasma partition	0.63

*Transport delays, cardiopulmonary parameters, and cardiac output are derived from the data for patient #3 of Taeger et al. [17]. Regional flow fractions, systemic volumes, clearance, and blood-plasma partition coefficient are typical values for a 70 kg human [18].

We set the transport delays T_i, T_p, and T_s to 5 seconds. This is reasonable because the transport delay from a peripheral venous infusion site to a peripheral arterial sample site was reported to be 14 seconds for indocyanine green [10]. Since alfentanil first reappeared in mixed venous blood 35 seconds after a central venous injection in patient #3 of Taeger's study, and because T_p is already set to 5 seconds, we fixed the recirculation transport delay T_r to 30 seconds.

We determined volumes and flow fractions for the systemic tissues from literature values for tissue weights and blood flows in a 70 kg-human, and from weight-normalized tissue volumes of rats [18]. The VRG parameters, V_{VRG} and f_{VRG}, were calculated by summing volumes and flows for brain, heart, gut, liver, pancreas, spleen, and kidney, as well as capillary blood, which comprises approximately five percent of the total blood volume [19]. We set the apparent volume of the residual compartment to 14.9 L, which is the difference between total body volume (70 L) and the real volume taken up by the tissues (55.1 L) [18]. Since the total fraction of cardiac output delivered to the VRG, muscle, and fat was 79 percent [18], we assigned the remaining 21 percent to the residual tissue. Using a blood-plasma partition coefficient for alfentanil

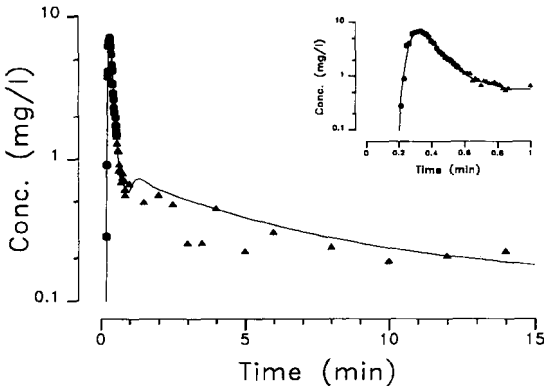

Fig. 3. Measured (•) and fitted (solid-c_s) arterial concentrations following an IV bolus of alfentanil on two time scales: 0 to 15 minutes, and 0 to 1 minute (inset). Rapidly sampled arterial data were obtained from K. Taeger [17]. Cardiopulmonary parameters of the hybrid model were fit to the arterial data between 0.2 and 0.57 minutes. The data between 0.57 minutes and 15 minutes provides validation for the hybrid model.

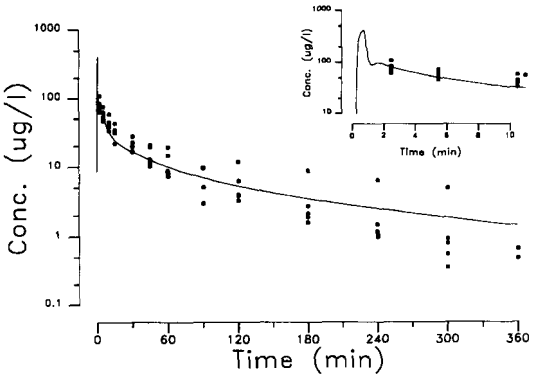

Fig. 4. Measured (•) and predicted (solid-c_s) arterial concentrations following an IV bolus of alfentanil on two time scales: 0 to 360 minutes, and 0 to 10 minutes (inset). Measurements were taken from published data in 5 surgical patients [22].

of 0.63 [20], and a total plasma clearance of 0.34 L/min [18], we computed the VRG blood clearance of alfentanil to be 0.64 L/min. The complete list of hybrid-model parameters for a typical 70-kg human is summarized in Table I. Additional details are in Wada [21].

Fig. 3 illustrates the fit of the hybrid model to the rapidly sampled arterial data measured by Taeger et al. [17]. The computer simulation was performed with SIMULINK (The MathWorks Inc., Natick, MA) using a method designed for systems which are relatively linear. Data prior to 0.57 minutes (•) were used to estimate the cardiopulmonary parameters of the hybrid model. Data following 0.57 minutes (▲) substantiate the hybrid model. The secondary concentration peak at 1.3 minutes reflects the return of drug in recirculating venous blood.

The hybrid model predictions were also compared with arterial data measured by Camu *et al.* [22]. In this study, peripheral IV bolus injections of alfentanil between 5 and 9 mg were administered over 0.5 minutes to 5 surgical patients, and peripheral arterial concentrations were measured for up to six hours. Fig. 4 illustrates the close agreement between predicted (c_s) and measured dose-normalized concentrations on two time scales: 0 to 360 minutes and 0 to 5 minutes. The vertical spread of measured concentrations indicates the population variability in alfentanil pharmacokinetics.

IV. Simulations of Computer-Controlled Infusions

Computer simulation of the hybrid model for computer-controlled infusions had two objectives. The first objective was to show that pharmacokinetic study design affects parameter estimates for three-compartment pharmacokinetic models, and that the performance of computer-controlled infusion pumps critically depends upon these parameter estimates. The second objective was to characterize the tradeoffs associated with varying two control parameters of standard CCIPs, the maximum infusion rate and the control rate (*i.e.*, the frequency at which the infusion rate is changed). All computer simulations were performed with SIMULINK, and all least squares minimizations were performed with MATLAB.

To illustrate the effects of varying the pharmacokinetic study design on the parameter estimates of a three-compartment model (Fig. 5), we duplicated the protocols from two clinical pharmacokinetic studies, simulated peripheral arterial concentrations (c_s) from the hybrid model over 4 hours, and estimated parameters for the three-compartment model using a weighted least squares criterion with terms of the form $(c_s - c)^2/c^2$ where c is the predicted concentration of the three-compartment model.

The first protocol, utilizing short infusions and rapid arterial samples, is analogous to a study by Scott *et al.* [24]. The input to the hybrid model was 1 mg alfentanil delivered over 3 minutes. Simulated arterial concentrations were recorded at 0.5, 1, 1.5, 2, 2.5, 3, 4, 5, 6, 8, 10, 15, 20, 40, 60, 90, 120, 180, and 240 minutes. The parameter estimates for the three-compartment model are reported in Table II along with the actual parameters obtained from the clinical study. The first ten minutes of the fit to the simulated samples is illustrated in Fig. 6(a), although good agreement exists over the entire 4-hour duration.

The second protocol, featuring bolus injections and slow arterial samples, is similar to the study by Camu *et al.* [22]. The input infusion to the hybrid model was 1 mg of alfentanil over 0.5 minutes, and peripheral arterial concentrations were recorded at 2, 3, 4, 6, 8, 10, 15, 20, 40, 60, 90, 120, 180, and 240 minutes. The first 5 minutes of the fit is illustrated in Fig. 6(b), and the derived parameters for the three-compartment model are reported in Table II. Again, a good fit exists over the 4-hour duration. For comparison, the parameter estimates from Maitre et al. [23] are also tabulated, because the authors utilized the data of Camu *et al.* [22] in their analysis.

The differences between parameter estimates derived from the short-infusion and the bolus protocols are most dramatic for V_c, k_{12}, k_{21}, and k_{13} (Table II) whether determined in the clinical studies or from the hybrid model. The hybrid model

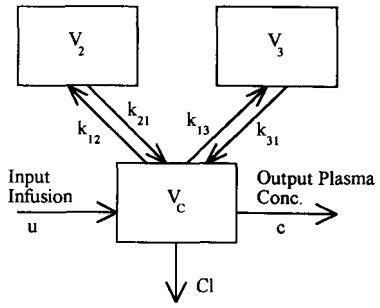

$$\dot{x} = \begin{bmatrix} -\left(\frac{Cl}{V_c} + k_{12} + k_{13}\right) & k_{21} & k_{31} \\ k_{12} & -k_{21} & 0 \\ k_{13} & 0 & -k_{31} \end{bmatrix} x + \begin{bmatrix} 1 \\ 0 \\ 0 \end{bmatrix} u$$

$$c = \begin{bmatrix} \frac{1}{V_c} & 0 & 0 \end{bmatrix} x$$

Fig. 5. Three-compartment pharmacokinetic model. Drug entering the central compartment (volume V_c) equilibrates instantaneously throughout the compartment. Drug is both cleared and sampled from V_c. The state vector x consists of the drug masses in the three compartments.

TABLE II
COMPARISON OF THREE-COMPARTMENT MODEL PARAMETER ESTIMATES FOR TWO PROTOCOLS

	Short-Infusion		Bolus	
	Simulation*	Scott [24]†	Simulation*	Maitre [23]†
V_c (L)	2.5	2.2	7.8	7.8
Cl (L· min^{-1})	0.37	0.20	0.35	0.36
k_{12} (min^{-1})	0.97	0.66	0.12	0.10
k_{21} (min^{-1})	0.46	0.21	0.089	0.067
k_{13} (min^{-1})	0.27	0.11	0.035	0.017
k_{31} (min^{-1})	0.026	0.017	0.012	0.013

*Parameter estimates using simulated data from the hybrid model.

†Parameter estimates using data from clinical studies.

predicts that estimates of V_c from short-infusion data could be as little as one-third the estimates from bolus data. Conversely, estimates of k_{12}, k_{21}, and k_{13} could be 5 to 10 times greater when estimated via a short infusion. Estimates of clearance and k_{31} are not affected as significantly by the different protocols.

Next, we examined the effect of using the infusion-derived parameters (column two of Table II) and the bolus-derived parameters (column four of Table II) in a CCIP. The target plasma alfentanil concentration was set to 450 μg/L [23], the control rate (Δ) was set to 15 seconds, and the maximum infusion rate was set to 50 μg/kg/min [7].

To compute the CCIP infusion, we discretized the model equations of Fig. 5 as follows:

$$x(t+1) = A_d x(t) + B_d u(t), \tag{22}$$

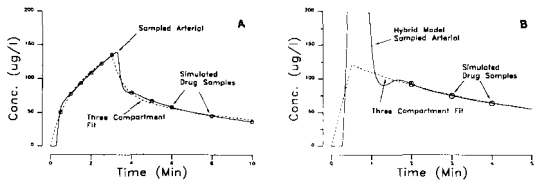

Fig. 6. Simulated hybrid model arterial concentrations (solid-c_s) and fitted three-compartment model concentrations (dash-c) for two typical protocols used in pharmacokinetic studies: (a) 1-mg alfentanil delivered over 30 seconds (*e.g.*, [22]), and (b) 1-mg alfentanil delivered over 3 minutes (*e.g.*, [24]). Three-compartment model parameters were fit to simulated arterial samples (⊙). The fits are shown during the first 5 minutes (panel A) or the first 10 minutes (panel B); however, arterial samples were simulated to 240 minutes in both cases.

$$c(t) = Cx(t), \tag{23}$$

where the matrices A, B, and C are the state matrices of the equations in Fig. 5, $A_d = \exp(A\Delta), B_d = A^{-1}(I - \exp(A\Delta))B$, I is the identity matrix with the same dimensions as A, and the notation $x(t+1)$ denotes the value of x at time $(t+1)\Delta$. The infusion which achieves the desired concentration c_d by time $t+1$ is

$$\bar{u}(t) = \frac{c_d - CA_d x(t)}{CB_d}. \tag{24}$$

The infusion was constrained to be less than the maximum infusion rate (u_{max}) and nonnegative:

$$u(t) = \max(\min(\bar{u}(t), u_{max}), 0). \tag{25}$$

The CCIP infusions $u(t)$ were calculated using (22)–(25) for the infusion-derived and the bolus-derived parameter sets in Table II, and the time profiles are displayed in Fig. 7(a) and 7(c) respectively. The infusion saturates for 0.25 minutes using the infusion-derived parameters (Fig. 7(a)), and 1.00 minutes using the bolus-derived parameters (Fig. 7(c)). This is in part related to the increased V_c for the bolus-derived parameters.

The hybrid model and the three-compartment models were then simulated using $u(t)$ as input. The following terms were used to quantitate controller performance.

$$t_{max} = \underset{t}{\operatorname{argmax}}(c_a(t)) \tag{26}$$

$$\text{percent overshoot} = \frac{c_a(t_{max}) - c_d}{c_d} \tag{27}$$

$$\text{rise time } (t_r) = \min_t (t | c_a(t) \geq .9c_d) \tag{28}$$

$$\text{predicted rise time } (t_{rp}) = \min_t (t | c(t) = c_d) \tag{29}$$

$$\text{prediction error} = \frac{c_a(t) - c_d}{c_d} \tag{30}$$

$$\text{average prediction error} = \frac{1}{(5 - t_{rp})} \int_{t_{rp}}^{5} \frac{c_a(t) - c_d}{c_d} dt \tag{31}$$

The hybrid model predicts that a CCIP programmed with the infusion-derived parameters will result in an overshoot of 39 percent, a rise time of 0.3 minutes, and an average prediction error of 3 percent (Fig. 7(b)). The bolus-derived CCIP results

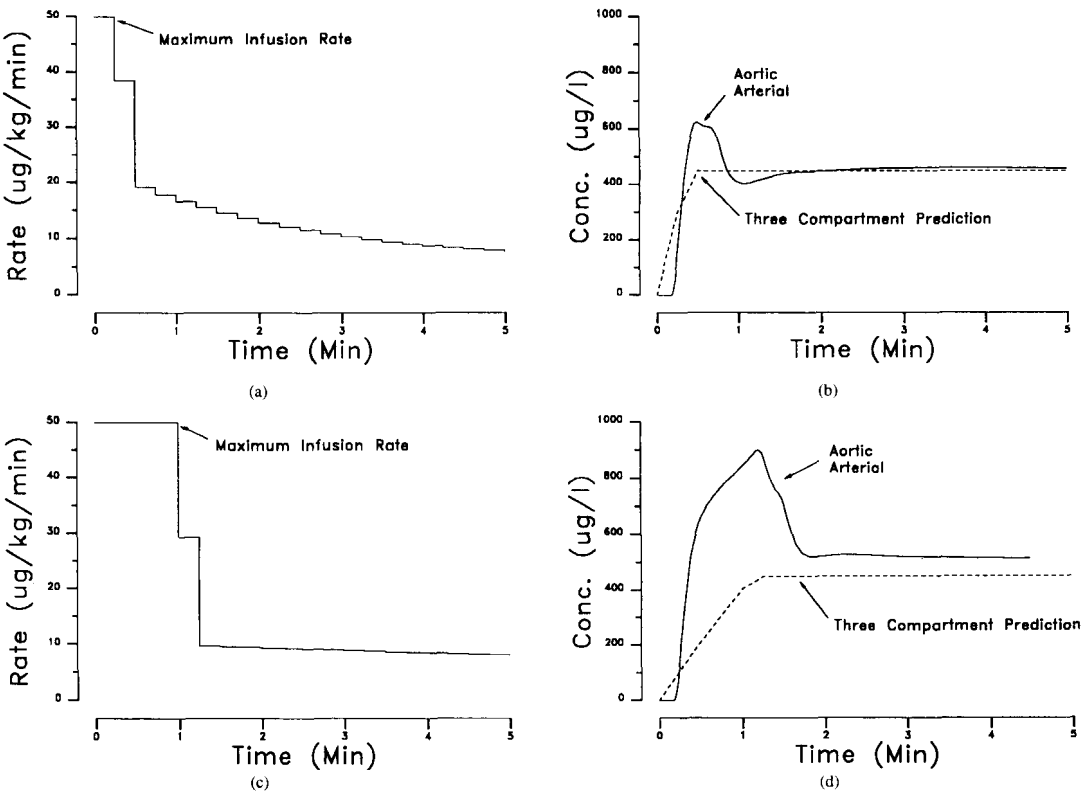

Fig. 7. Simulations of the hybrid model with CCIP infusions computed from the infusion-derived or the bolus-derived three compartment models (see Fig. 6). For the infusion-derived three compartment model, Figure 7(a) depicts the CCIP infusion targetting an alfentanil plasma concentration of 450 μg/l, and Figure 7(b) describes the simulated arterial concentration of the hybrid model (solid) and the three compartment model (dash) using the infusion in Figure 7(a) as input. Figures 7(c) and 7(d) illustrate the CCIP infusion and simulated concentrations for the bolus-derived three compartment model. In both simulations, the maximum infusion rate was 50 μg/kg/min, and the control interval Δ was 0.25 minutes.

in an increased overshoot of 100 percent, no change in rise time, and an increased average prediction error of 25 percent (Fig. 7(d)).

In the second part of the simulation study, we examined the effects of varying two CCIP control parameters, namely the maximum infusion rate $u_{\max}$, and the control rate Δ. In each case, the CCIP infusion $u(t)$ was calculated from the infusion-derived parameters using (22)–(25), the hybrid model was simulated with $u(t)$, and CCIP performance was calculated using (26)–(31).

Decreasing $u_{\max}$ generally increases the rise time, but decreases the overshoot and the average prediction errors, as illustrated in Table III. Increasing $u_{\max}$ above 50 μg/kg/min does not decrease the rise time, but decreases the predicted rise time and significantly increases the overshoot. The decision to decrease $u_{\max}$ should be governed by a tradeoff between decreased rise time and increased overshoot.

Table IV illustrates that increasing the control interval Δ from 0.25 to 2.0 minutes (with $u_{\max}$ set to 50 μg/kg/min) increases the rise time, but decreases the overshoot. Again, choosing Δ is a tradeoff between considerations of rise time and overshoot. If it is desirable to maintain the arterial concentrations within 10 percent of the three compartment model predictions, then a control interval of 1.00 minutes might be appropriate.

V. Discussion

Physiologically-based pharmacokinetic models have flourished since their introduction in the pharmacokinetic literature [11], [12]. Such models are typically used in toxicology studies to quantify the accumulation of drug in tissues, or to predict the effects of physiological perturbations on tissue uptake. We utilized the physiologically-based pharmacokinetic model differently: as a more realistic representation of drug distribution to simulate the performance of computer controlled infusion pumps.

Hybrid modeling describes the technique used to introduce complexity where detail is required, and to simplify where detail is unnecessary. Following an intravenous infusion, the cardiopulmonary system is the primary determinant of the peak drug concentrations in arterial plasma prior to recirculation. Since arterial plasma generates the concentration gradient

which drives drug into tissue, we developed a cardiopulmonary model with increased complexity. Four cardiopulmonary components were sufficient to obtain predictions of arterial alfentanil concentrations following a bolus. Although the compartments were assigned conceptual names such as the left heart chamber, physiological meaning cannot be attached to the cardiopulmonary parameter values without validation.

Because classical pharmacokinetic models of alfentanil require three compartments [22], three systemic compartments were deemed sufficient to model alfentanil kinetics after recirculation. The extra residual compartment was added to maintain consistency with total body flow and weight. The reciprocal of the time constants (ratio of tissue volume to tissue blood flow) for the brain, heart, gut, liver, pancreas, spleen, and kidney ranged between 0.12 and 2.15 minutes, and were lumped into the vessel-rich group (VRG) [18]. The reciprocal of muscle and fat time constants were 44 and 141 minutes respectively, and these tissues were allocated distinct compartments.

Data in the first 0.6 minutes (see Fig. 3) were used to determine the cardiopulmonary system parameters, hence the simulated peak arterial concentrations were not validated. However, the simulated peak arterial blood concentration of 293 μg/L in Fig. 4 (peak arterial plasma concentration is 465 μg/L) is reasonable considering that the ratio of the drug-infusion rate to the cardiac output is about 370 μg/L. The hybrid model parameters were not adjusted to obtain the close agreement between the hybrid model predictions and the measured concentrations in Fig. 4. The validation provides confidence to use the model to predict concentrations during CCIP infusions.

The hybrid model predicts that the parameters of a three-compartment pharmacokinetic model depend critically on the infusion regimen and sampling scheme (Fig. 6 and Table II). The fit in Fig. 6(b) following the bolus infusion will be sensitive to the sampling times chosen during the first two minutes. The fit in Fig. 6(a) following the short infusion appears to be relatively insensitive to the addition or deletion of samples. This suggests that for rapid sampling strategies, a short infusion protocol provides more robust estimates of three-compartment pharmacokinetic model parameters. The dramatic difference between the infusion-derived parameters and the bolus-derived parameters calculated with the hybrid model in Table II suggests that the clinically observed differences of Maitre *et al.* [23] and Scott *et al.* [24] are consistent, and are not due to differences in parameter-estimation techniques. Only the parameter relevant to steady-state performance, the clearance, remains constant under both simulated protocols; however, clearance has negligible effect on transient performance during CCIP control.

Fig. 7 indicates that CCIPs should utilize three-compartment parameters derived from a short infusion, and not from a bolus infusion. It is the combination of the high-resolution sampling and slow infusion which allows the infusion-derived parameters to capture the transient dynamics required for CCIP control. In practice, earlier plasma samples will not improve the performance of the bolus-derived CCIP, because the rapidly changing plasma concentrations will introduce variability in measured concentrations. Therefore, we attribute the poor CCIP performance when using bolus-derived parameters to the short duration of the bolus.

TABLE III
EFFECTS OF VARYING THE MAXIMUM INFUSION RATE (u_{max}) ON CCIP PERFORMANCE

u_{max} (μg/kg/min)	Overshoot (%)	Rise Time (min)	Predi. Rise Time (min)	Avg. Pred. Error (%)
20	2	1.5	1.5	1
30	10	0.5	0.75	2
40	33	0.4	0.5	3
50	39	0.3	0.5	3
60	62	0.3	0.5	2
70	86	0.3	0.25	3

TABLE IV
EFFECTS OF VARYING THE INFUSION UPDATE INTERVAL (Δ) ON CCIP PERFORMANCE

Δ (min)	Overshoot (%)	Rise Time (min)	Pred. Rise Time (min)	Avg. Pred. Error (%)
0.25	39	0.3	0.5	3
0.5	43	0.4	0.5	3
0.75	20	0.5	0.75	2
1.0	10	0.7	1.0	0
1.5	5	1.2	1.5	−1
2.0	4	1.7	2.0	−3

The infusion and bolus protocols were carefully chosen for comparison with a clinical study by Raemer *et al.* [7], who measured the performance of a CCIP with parameters estimated from an infusion study by Scott *et al.* [24], and with a bolus study by Maitre *et al.* [23]. When Raemer used Scott's parameters in a CCIP, the median prediction error was 2 percent, while Maitre's parameters resulted in a median prediction error of 52 percent. In another CCIP study using bolus-derived parameters, the prediction error averaged across 18 patients was 54 percent at 2 minutes, and 12 percent overall [15]. Also, the prediction error appeared to be largest after step increases in the target plasma concentration [7], [15]. These clinical results support the utility of the hybrid model to predict arterial concentrations during CCIP control.

Tables III and IV point out the tradeoffs associated with various CCIP controller parameters, namely the maximum infusion rate and the control interval. Although the numerical results are only meaningful for alfentanil and a target plasma concentration of 450 μg/L, the conclusions will apply conceptually to other drugs and target concentrations. Generally, slowing down the CCIP system by decreasing the maximum infusion rate or increasing the control interval will decrease arterial overshoots. It is intuitively consistent that the three-compartment model begins to predict accurately when the predicted CCIP rise time approaches the time of the recirculation peak (Fig. 3).

While the target concentrations for alfentanil to ablate response to various surgical stimuli have been characterized

[25], there are no similar characterizations identifying the range of plasma concentrations that will produce adverse side effects. Also, the arterial overshoot will not be as dramatic at the brain, the site where both therapeutic and side effects occur. However, muscular rigidity, hypotension, and bradycardia were observed during the induction of anesthesia when performing CCIP control with bolus-derived parameters [15]. Thus, the arterial overshoot is significant enough to cause undesirable side effects.

Pharmacokinetic variability across individuals, or interindividual variability, will limit the predictive performance of any pharmacokinetic model (Fig. 4). An effort has been made to reduce the interindividual variability in the three-compartment model by linearly relating V_c, Cl, and k_{31} to patient covariates (*e.g.*, age, weight) [22]. However, Table II suggests that the duration of the infusion can create variability in V_c and k_{31}. From Fig. 6(b), the parameters of the three-compartment model will be affected by the timing of the early samples, and by changes in cardiac output (the peak arterial concentration is related to the ratio of the infusion rate and the cardiac output). Thus the hybrid model can provide insights into reducing pharmacokinetic variability by explaining the underlying mechanisms governing variability in classical pharmacokinetic models.

Direct utilization of the hybrid model during surgery in humans will be realistic only if the sensitivity of the controller to physiologic variability in kinetic parameters is small relative to the range of therapeutic drug concentrations for an individual patient. For example, cardiac output is an important determinant of early peak concentrations during CCIP control, and the cardiac output of the 6 patients mentioned in Taeger *et al.* [17] ranged from 3.0 to 5.5 L min. Because cardiac output cannot be measured easily in an individual patient [26], it may be necessary to decrease variability by relating cardiac output to patient age [27]. Ultimately, a sensitivity analysis will be required to determine which parameters require further refinement, and whether the hybrid model will have direct utility in CCIPs. As is, the hybrid model can provide guidelines to designing CCIPs based upon two or three-compartment models which are more robust to physiologic and methodologic variability.

In summary, the hybrid pharmacokinetic model has been developed to provide insight into current CCIP systems. Close agreement with measured data lend confidence to the validity of the model. Hybrid-model simulations suggest that CCIP performance will improve by using classical pharmacokinetic models estimated from short infusions instead of boluses. Also careful selection of the maximum infusion rate and the control interval will reduce the amplitude of unexpected transient peaks in arterial plasma concentrations.

REFERENCES

[1] H. Schwilden, "A general method for calculating the dosage scheme in linear pharmacokinetics," *Eur. J. Clin. Pharmacol.*, vol. 20, pp. 379–386, 1981.

[2] J. M. Alvis, J. G. Reves, A. V. Govier, P. G. Menkhaus, C. E. Henling, J. A. Spain, and E. Bradley, "Computer-assisted continuous infusion of the intravenous analgesic fentanyl during general anesthesia—an interactive system," *IEEE Trans. Biomed. Eng.*, vol. 32, pp. 323–329, 1985.

[3] J. R. Jacobs, "Algorithm for optimal linear model-based control with application to pharmacokinetic model-driven drug delivery," *IEEE Trans. Biomed. Eng.*, vol. 37, pp. 107–109, 1990.

[4] J. M. Bailey and S. L. Shafer, "A simple analytical solution to the three-compartment pharmacokinetic model suitable for computer-controlled infusion pumps," *IEEE Trans. Biomed. Eng.*, vol. 38, pp. 522–525, 1991.

[5] J. Dixon, F. L. Roberts, R. M. Tackley, G. T. R. Lewis, H. Connell, and C. Prys-Roberts, "Study of the possible interaction between fentanyl and propofol using a computer-controlled infusion of propofol," *Br. J. Anaesth.*, vol. 64, pp. 142–147, 1990.

[6] P. S. A. Glass, J. R. Jacobs, L. R. Smith, B. Ginsberg, T. J. Quill, S. A. Bai, and J. G. Reves, "Pharmacokinetic model-driven infusion of fentanyl: assessment of accuracy," *Anesthesiol.*, vol. 73, pp. 1082–1090, 1990.

[7] D. B. Raemer, A. Buschman, J. R. Varvel, B. K. Philip, M. D. Johnson, D. A. Stein, and S. L. Shafer, "The prospective use of population pharmacokinetics in a computer-drive infusion system for alfentanil," *Anesthesiol.*, vol. 73, pp. 66–72, 1990.

[8] S. L. Shafer, J. R. Varvel, N. Aziz, and J. C. Scott, "Pharmacokinetics of fentanyl administered by computer-controlled infusion pump," *Anesth.*, vol. 73, pp. 1091–1102, 1990.

[9] M. E. Ausems, J. Vuyk, C. C. Hug, and D. R. Stanski, "Comparison of a computer-assisted infusion versus intermittent bolus administration of alfentanil as a supplement to nitrous oxide for lower abdominal surgery," *Anesthesiol.*, vol. 68, pp. 851–861, 1988.

[10] W. L. Chiou, "Potential pitfalls in the conventional pharmacokinetic studies: Effects of the initial mixing of drug in blood and the pulmonary first-pass elimination," *J. Pharm. Biopharm.*, vol. 7, pp. 527–536, 1979.

[11] W. W. Mapleson, "An electric analogue for uptake and exchange of inert gases and other agents," *J. Appl. Physiol.*, vol. 18, pp. 197–204, 1963.

[12] K. B. Bischoff and R. L. Dedrick, "Thiopental pharmacokinetics," *J. Pharm. Sci.*, vol. 57, pp. 1346–1351, 1968.

[13] L. E. Gerlowski and R. K. Jain, "Physiologically based pharmacokinetic modeling: Principles and applications," *J. Pharm. Sci.*, vol. 72, pp. 1103–1127, 1983.

[14] J. M. Gallo, "Hybrid pharmacokinetic models to described anti-HIV nucleoside brain disposition following parent and prodrug administration in mice," *Pharm. Res.*, vol. 8, pp. 247–253, 1991.

[15] H. J. M. Lemmens, J. G. Bovill, A. G. L. Burm, and P. J. Hennis, "Alfentanil infusion in the elderly," *Anaesthesia*, vol. 43, pp. 850–856, 1988.

[16] J. Schüttler, S. Kloos, H. Schwilden, and H. Stoeckel, "Total intravenous anaesthesia with propofol and alfentanil by computer-assisted infusion," *Anaesthesia*, vol. 43S, pp. 2–7, 1988.

[17] K. Taeger, E. Weninger, F. Schmelzer, M. Adt, N. Franke, and K. Peter, "Pulmonary kinetics of fentanyl and alfentanil in surgical patients," *Br. J. Anaesth.*, vol. 61, pp. 425–434, 1988.

[18] S. Björkman, D. R. Stanski, D. Verotta, and H. Harashima, "Comparative tissue concentration profiles of fentanyl and alfentanil in humans predicted from tissue/blood partition data obtained in rats," *Anesthesiol.*, vol. 72, pp. 865–873, 1990.

[19] R. K. Stoelting, *Physiology and Pharmacology in Anesthesia Practice*. Philadelphia, PA: J. B. Lippincott, 1987, pp. 640–641.

[20] W. E. G. Meuldermans, R. M. A. Hurkmans, and J. J. P. Heykants, "Plasma protein binding and distribution of fentanyl, sufentanil, alfentanil, and lofentanil in blood," *Arch. Int. Pharmacodyn. Ther.*, vol. 257, pp. 4–19, 1982.

[21] D. R. Wada, "Open loop control of drug infusion in anesthesia," Ph.D. Dissertation, Dept. of Elec. Eng., Univ. Calif. Los Angeles, 1991.

[22] F. Camu, E. Gepts, M. Rucquoi, and J. Heykants, "Pharmacokinetics of alfentanil in man," *Anesth. Analg.*, vol. 61, pp. 657–661, 1982.

[23] P. O. Maitre, S. Vozeh, J. Heykants, D. A. Thompson, and D. R. Stanski, "Population pharmacokinetics of alfentanil: the average dose-plasma concentration relationship and interindividual variability in patients," *Anesthesiol.*, vol. 66, pp. 3–12, 1987.

[24] J. C. Scott, D. R. Stanski, "Decreased fentanyl and alfentanil dose requirements with age. A simultaneous pharmacokinetic and pharmacodynamic evaluation," *J. Pharmacol. Exp. Ther.*, vol. 240, pp. 159–166, 1987.

[25] M. E. Ausems, C. C. Hug, D. R. Stanski, and A. G. L. Burm, "Plasma concentrations of alfentanil required to supplement nitrous oxide anesthesia for general surgery," *Anesthesiol.*, vol. 65, pp. 362–373, 1986.

[26] L. C. Siegel, R. G. Pearl, "Noninvasive cardiac output measurement: troubled technologies and troubled studies," *Anesth. Analg.*, vol. 74, pp. 790–792, 1992.

[27] A. C. Guyton, *Med. Phys.*, ed. 8. Philadelphia, PA: W. B. Saunders, 1991, pp. 221–222.

D. Russell Wada received the B.S. degree in engineering physics in 1983, and the M.S. degree in electrical engineering in 1984, from the University of California, Berkeley. He received the Ph.D. degree in electrical engineering from the University of California, Los Angeles, in 1991.

He is currently a postdoctoral fellow in the Department of Anesthesia at Stanford University. His research interests include pharmacokinetic-pharmacodynamic modeling and control of intravenous anesthetics.

Denham S. Ward (S'67–M'69) received the B.S.E.E. degree in 1969 from the University of Maine, Orono, the M.S. and Ph.D. degrees in System Science from UCLA in 1971 and 1975, respectively, and the M.D. degree from the University of Miami, Coral Gables, FL, in 1977.

He received anesthesiology training at UCLA. He was on the faculty at UCLA from 1980 to 1992. Dr. Ward is currently Professor and Chairman of the Department of Anesthesiology, University of Rochester, and holds a joint appointment in the Department of Electrical Engineering.