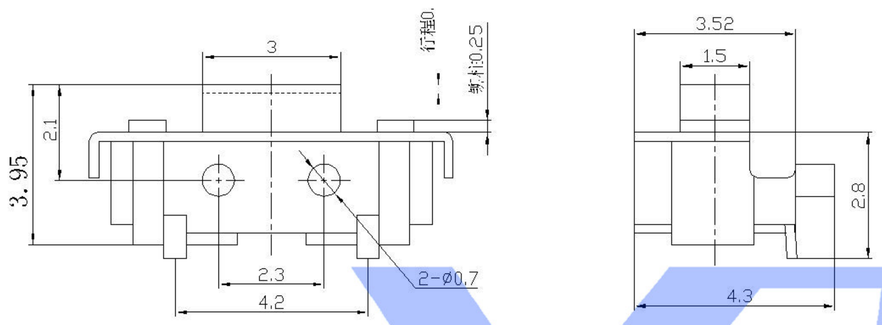

接点示意图

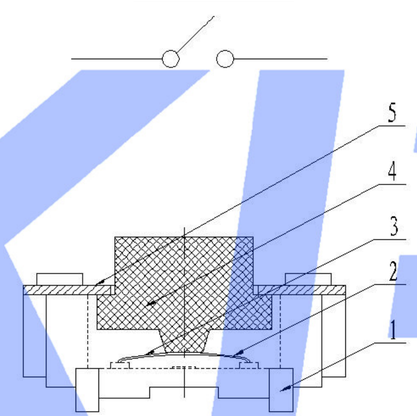

SPECIFICATION

Contact Rating	50mA, 12V DC
Contact Resistance	100mΩ max.
Insulation Resistance	100MΩ min. 500V DC
Dielectric Strength	250V AC/1 minute
Travel	0.25 mm
Operating Temp.	-25°C ~ +70°C
Storage Temp.	-30°C ~ +80°C

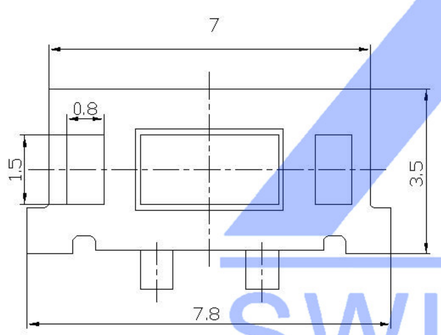

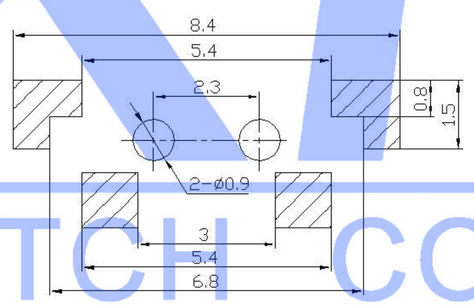

PAPT NO	TS-1101VS-X-X-X
Operating Force	A:100gf B:160gf C:260gf
Height	H:3.95
Fixed column	A:With B:without
Keystake	A:PA46: B:Silica gel

ITEM	PAPT NAME	TER.NO	QTY	MATERIAL	FINISHING	REMARK
⑤	Terminal	——	2	Brass (0.30t)	ag Plated	——
④	Contact	——	1	F.ag/SUS		——
③	Base	——	1	PA46		——
②	Cover	——	1	Brass	Tin plated	——
①	Keystake	——	1	PA46		——

MARK	DESCRIPTION	DATE	REVISED	APPROVED
△X				
△X				
△X				

REVISIONS

units:	mm
tolerance:	
X.X	±0.2mm
X.XX	±0.1mm
X.XXX	±0.05mm

UNSPECIFIED TOLERANCES

DSND		DATE		SCALE: N/A	MODEL TYPE: TACT SWITCH
DWN		DATE		VIEW:	PART NO.:
CHKD		DATE		UNIT: mm	
APPD		DATE		SIZE: A4	DWG NO.: TS-1101VS-X-X-X

XKB INDUSTRIAL PRECISION CO.,LIMITED

WEIGHT	SHEET	REVISION
1.0g	1/1	A0

www.xk-dg.cn www.helloxkb.com www.helloxkb.cn

XKB SWITCH CONNECTOR