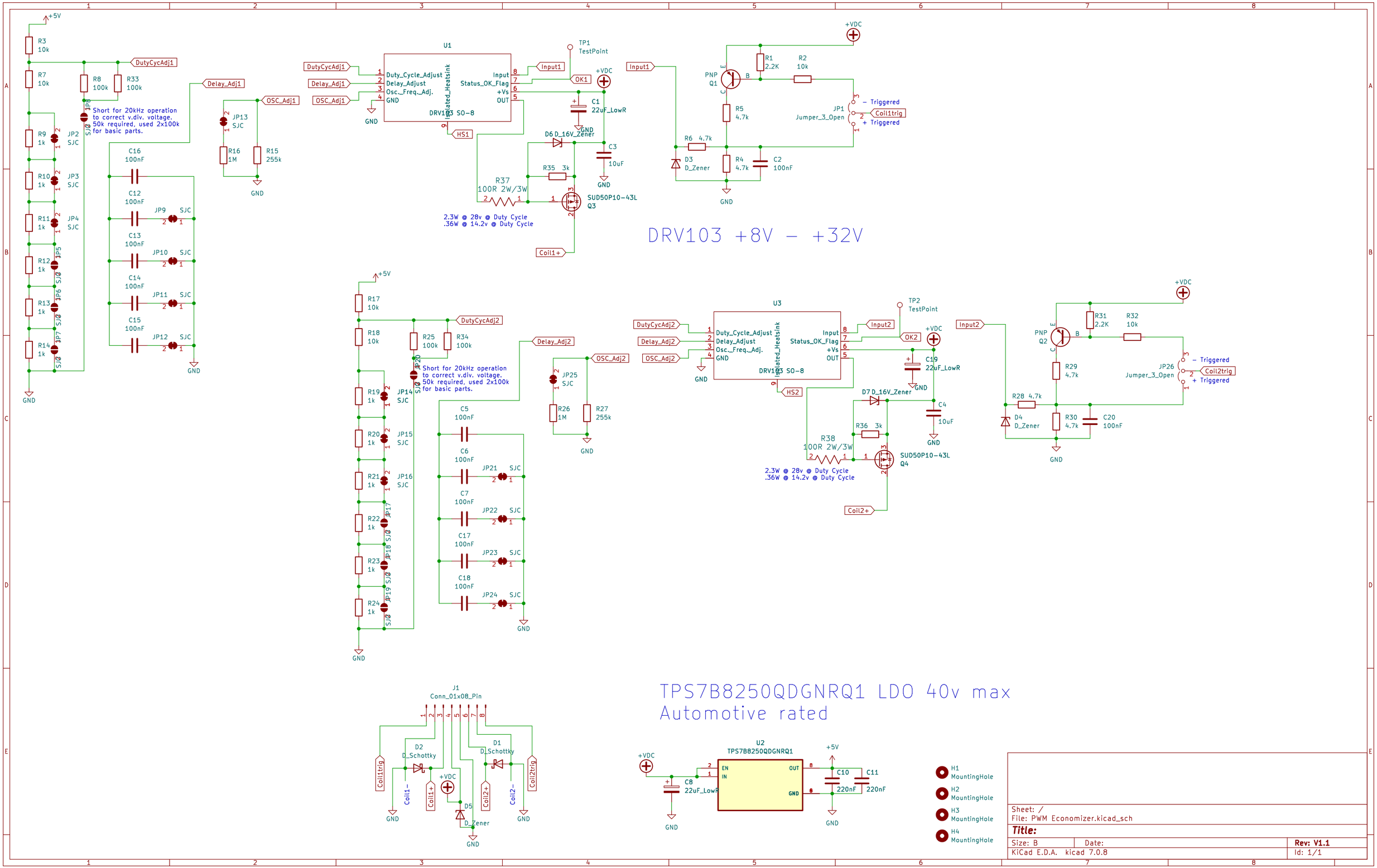
DRV103 +8V – +32V
TPS7B8250QDGNRQ1 LDO 40v max
Automotive rated
U1
DRV103 SO-8
U3
DRV103 SO-8
U2
TPS7B8250QDGNRQ1
Short for 20kHz operation to correct v.div. voltage. 50k required, used 2x100k for basic parts.
2.3W @ 28v @ Duty Cycle
.36W @ 14.2v @ Duty Cycle
SUD50P10-43L
J1
Conn_01x08_Pin
H1 MountingHole
H2 MountingHole
H3 MountingHole
H4 MountingHole
Sheet: /
File: PWM Economizer.kicad_sch
Title:
Size: B
Date:
Rev: V1.1
KiCad E.D.A. kicad 7.0.8
Id: 1/1