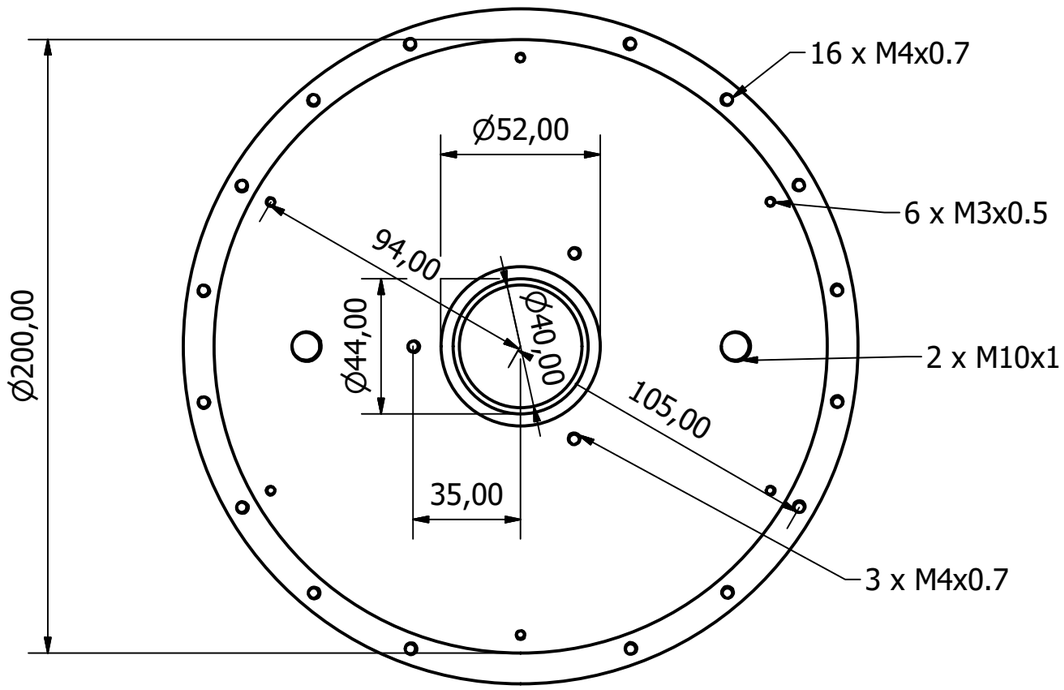

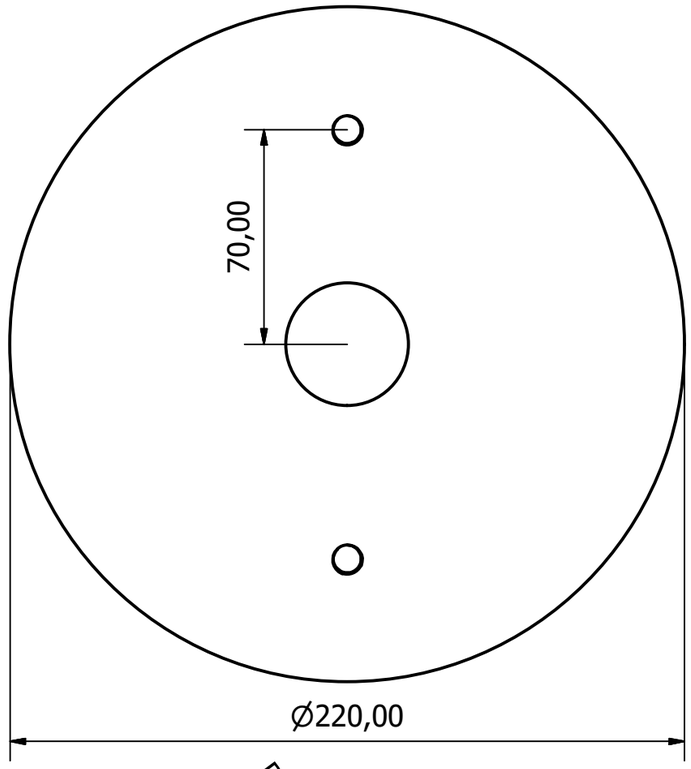

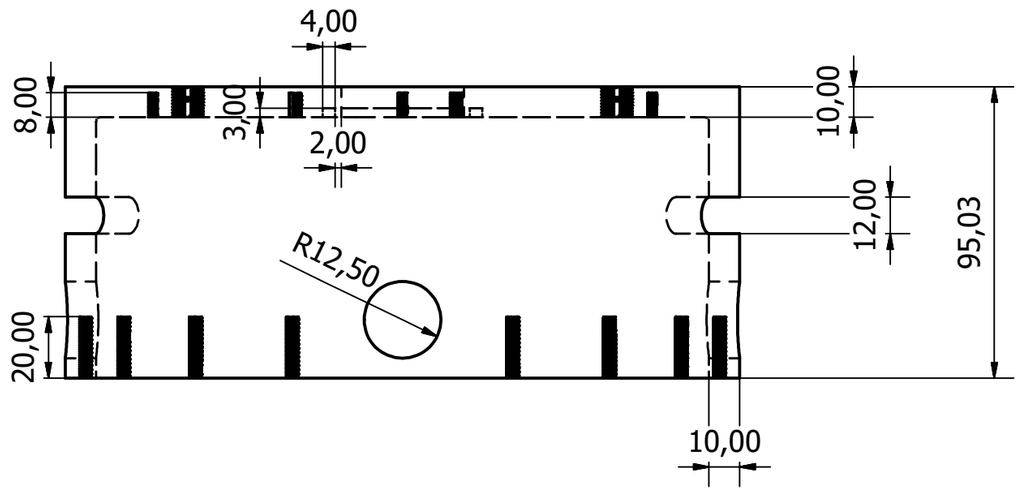

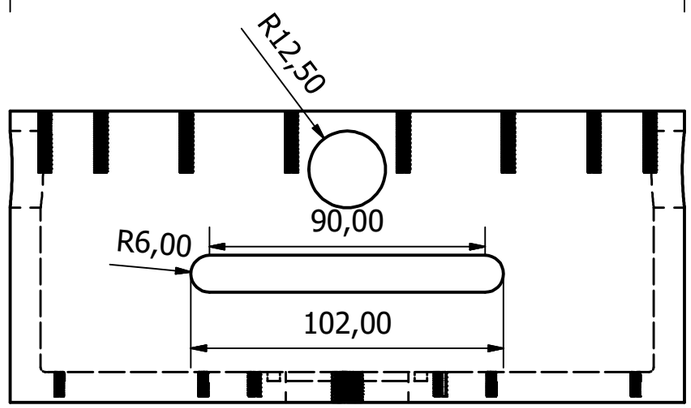

Screws List			
Type	Quantity	For Part	DESCRIPTION
M3x0.5	6	Case External	
M4x0.7	19	Case External	
M10x1	2	Case External	

Designed by	Checked by	Approved by	Date		Units	
Juan F.					mm	

Malmö University

Linear Case External

Edition

Sheet 1 / 1