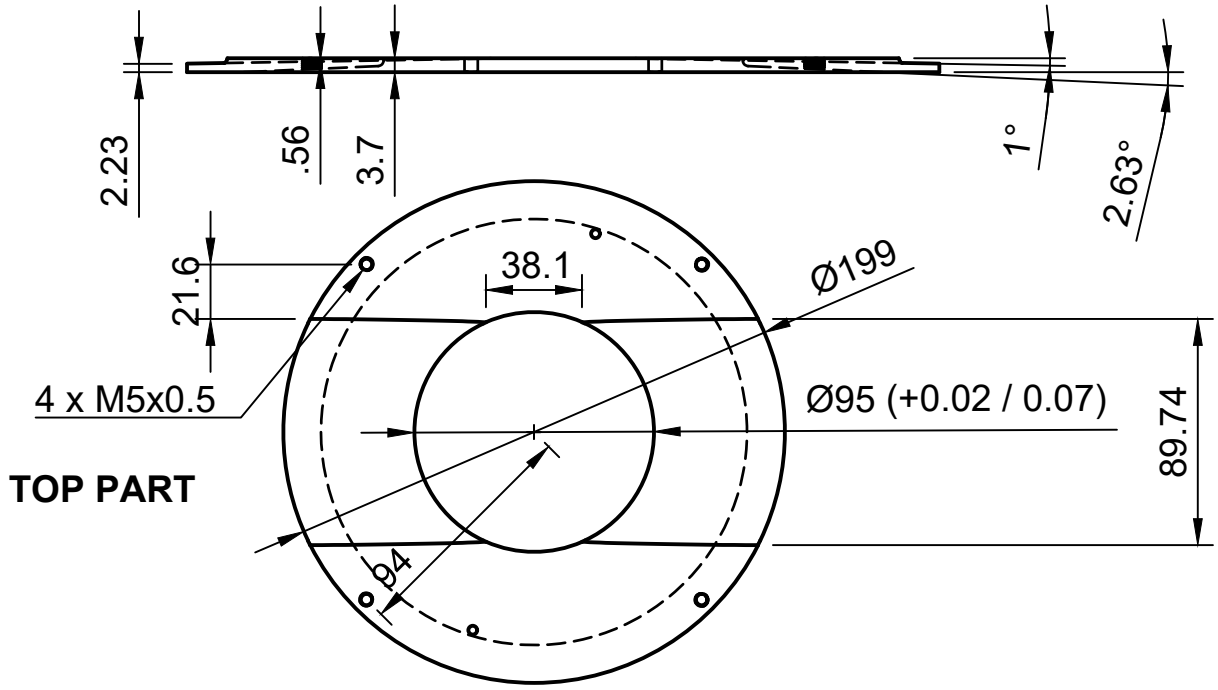

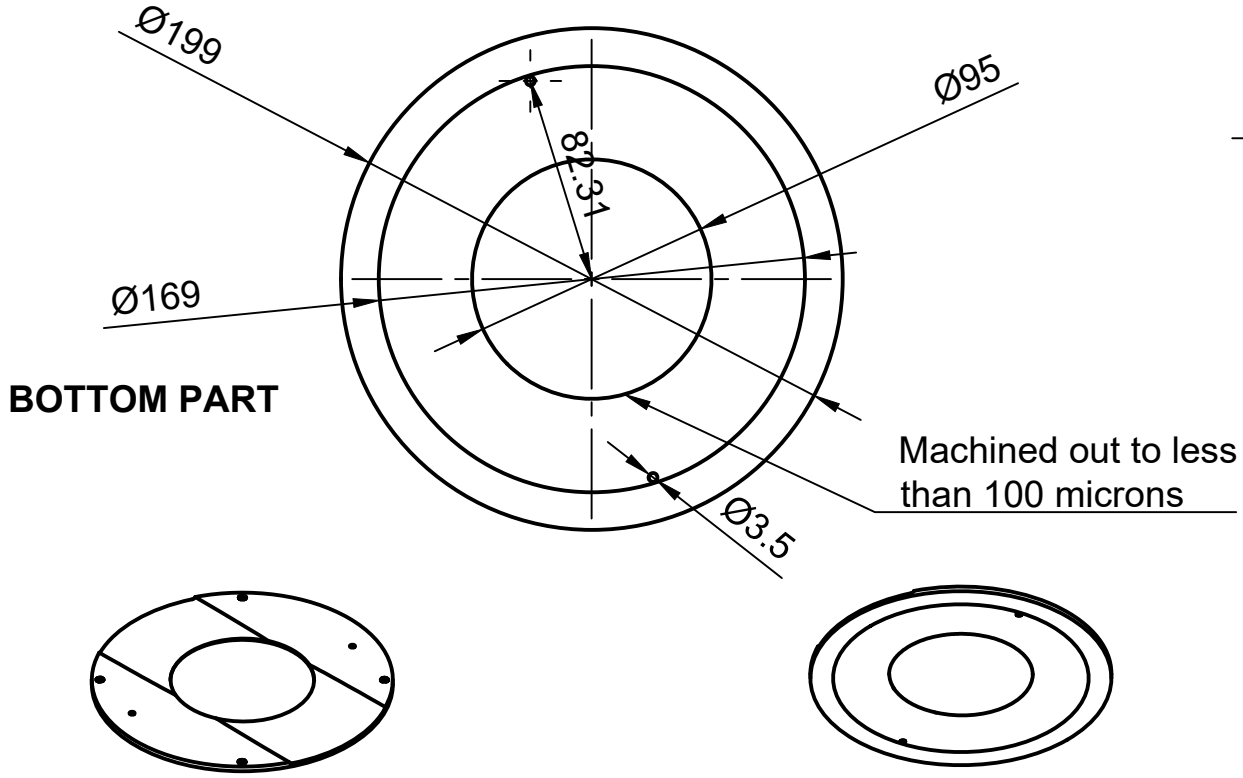

Dept.	Technical reference	Created by Juan F.	Units mm
Screws: M5x0.5 Quantity: 4		Document type	Document status
		Title MembraneSupport	DWG No.
			Rev. / Date of issue / Sheet 1/1