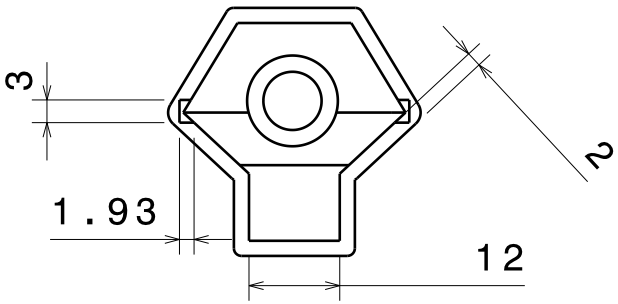

Front view
Scale: 1:1

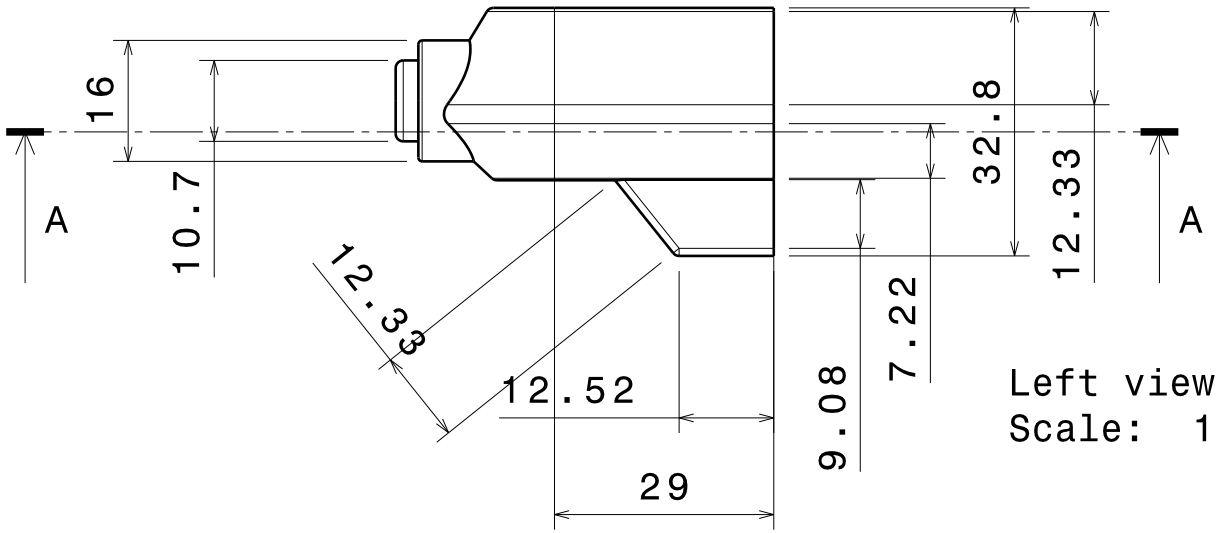

Left view
Scale: 1:1

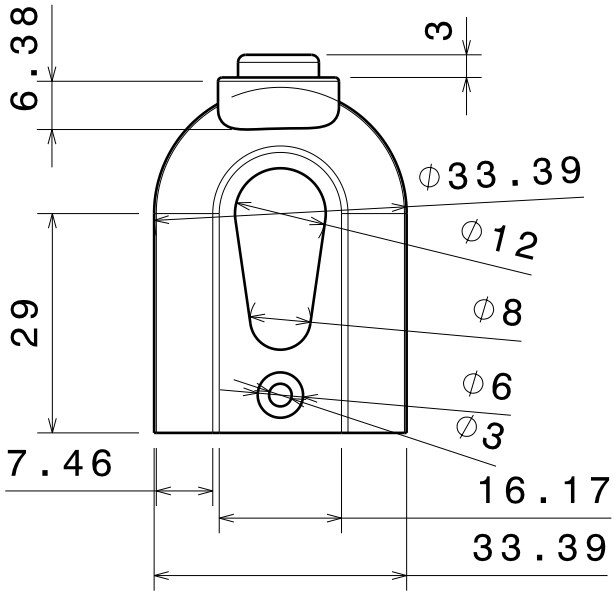

Top view
Scale: 1:1

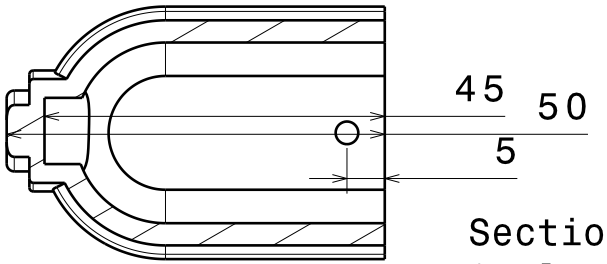

Section view A-A
Scale: 1:1

Final Ingenieria Grafica

DRAWN BY Juan Gesino	DATE 16-Dec-14	DRAWING TITLE Tapa			
CHECKED BY XXX	DATE XXX	SIZE A4	DRAWING NUMBER 1		REV X
DESIGNED BY XXX	DATE XXX	SCALE 1:1	WEIGHT(kg) 0.01		SHEET 1/7