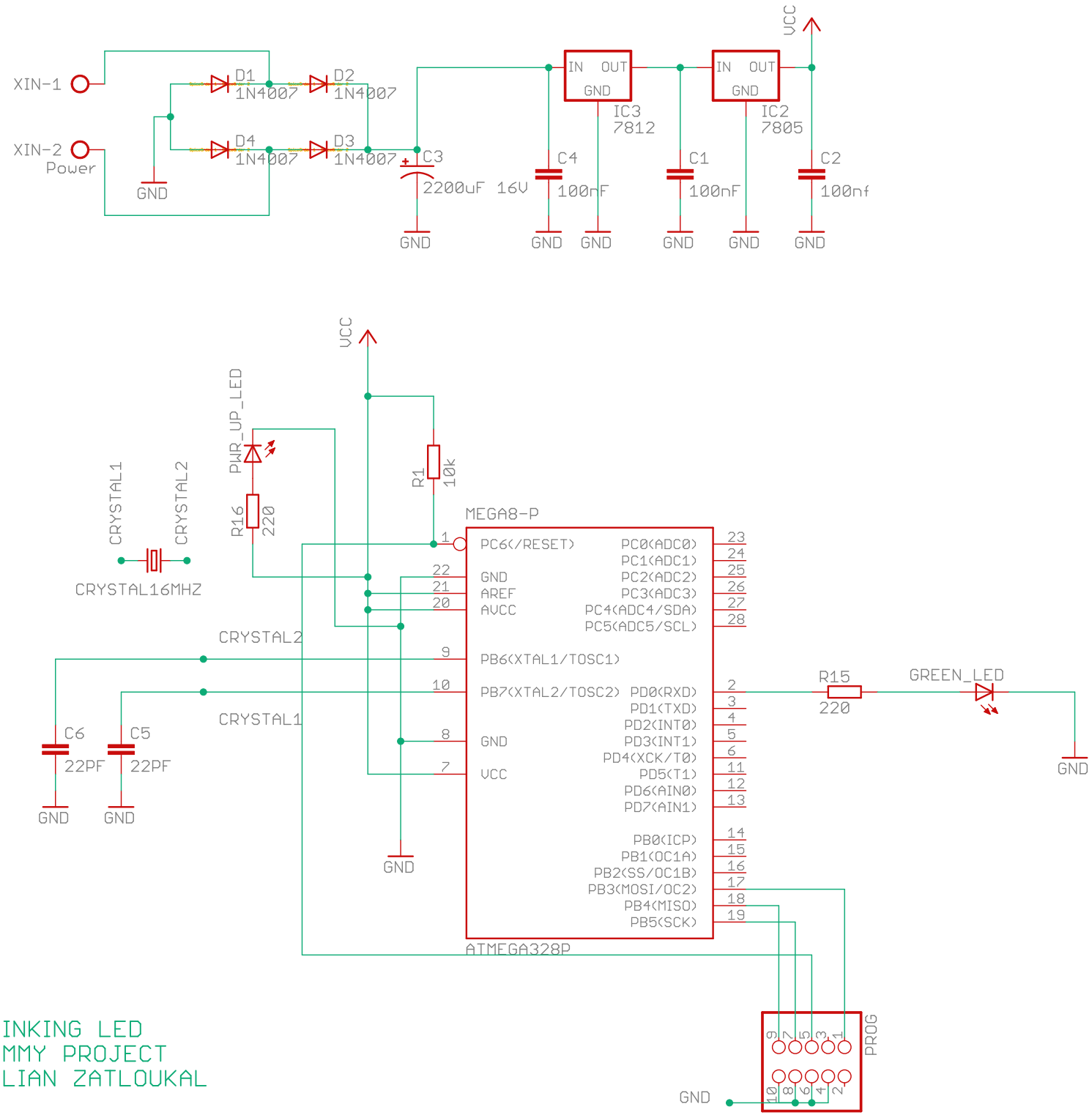
XIN-1
XIN-2
Power
GND
D1
1N4007
D2
1N4007
D4
1N4007
D3
1N4007
C3
2200uF 16V
IN OUT
GND
IC3
7812
IC2
7805
C4
100nF
C1
100nF
C2
100nf
VCC
PWR_UP_LED
R16
220
R1
10k
CRYSTAL1
CRYSTAL2
CRYSTAL16MHZ
MEGA8-P
PC6(/RESET)
GND
AREF
AVCC
PB6(XTAL1/TOSC1)
PB7(XTAL2/TOSC2)
GND
VCC
PC0(ADC0)
PC1(ADC1)
PC2(ADC2)
PC3(ADC3)
PC4(ADC4/SDA)
PC5(ADC5/SCL)
PD0(RXD)
PD1(TXD)
PD2(INT0)
PD3(INT1)
PD4(XCK/T0)
PD5(T1)
PD6(AIN0)
PD7(AIN1)
PB0(ICP)
PB1(OC1A)
PB2(SS/OC1B)
PB3(MOSI/OC2)
PB4(MISO)
PB5(SCK)
ATMEGA328P
C6
22PF
C5
22PF
R15
220
GREEN_LED
PROG
BLINKING LED
DUMMY PROJECT
JULIAN ZATLOUKAL