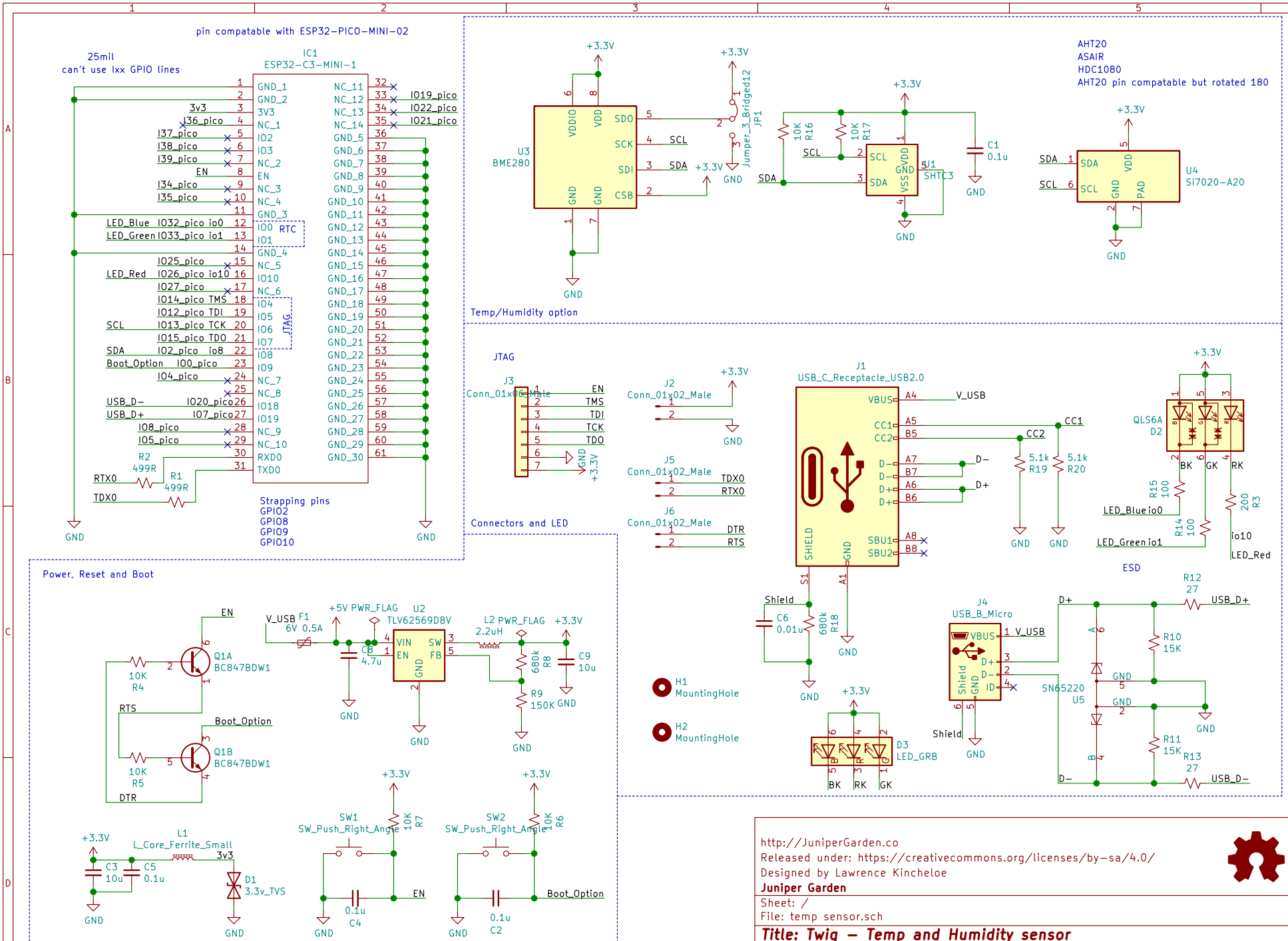

http://JuniperGarden.co
Released under: https://creativecommons.org/licenses/by-sa/4.0/
Designed by Lawrence Kincheloe
Juniper Garden

Sheet: /
File: temp sensor.sch

Title: Twig – Temp and Humidity sensor

Size: A	Date: 2021-10-24	**Rev: 0.3**
KiCad E.D.A. kicad (5.1.10)-1		Id: 1/1