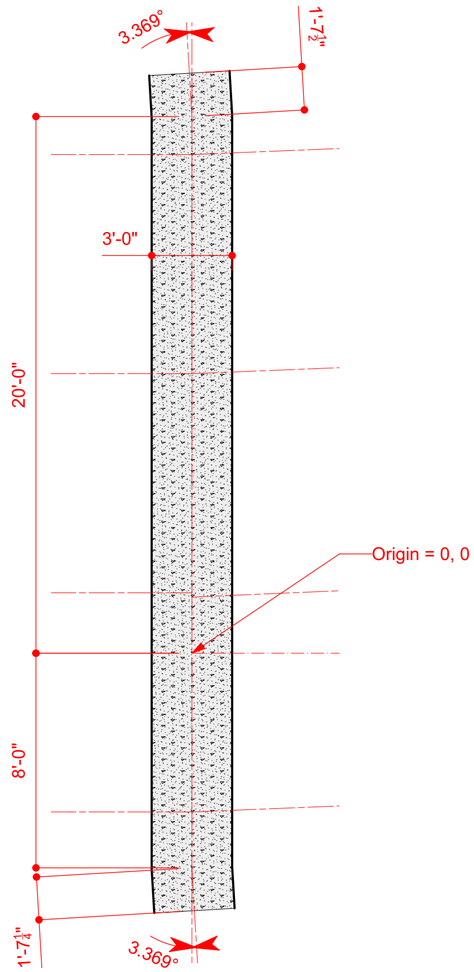

1 | Plan
Scale: 1/4" = 1'-0"

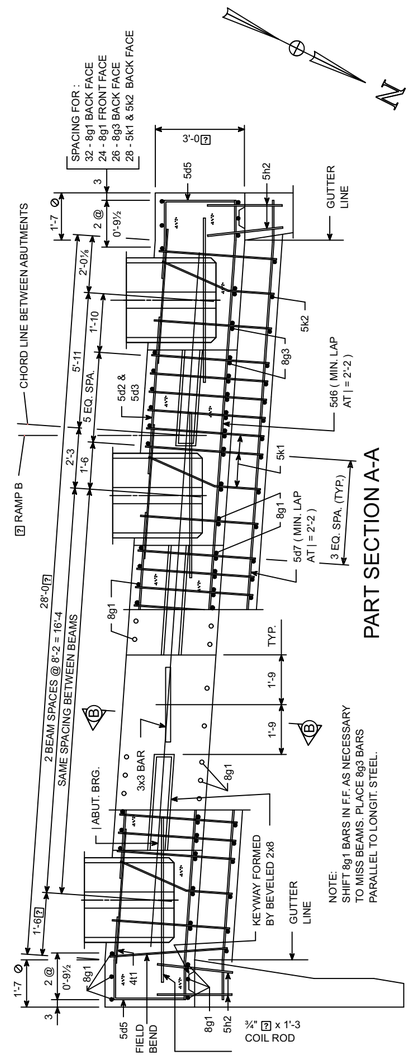

PART SECTION A-A

4 | [Drawing Title]
Scale: 1:50

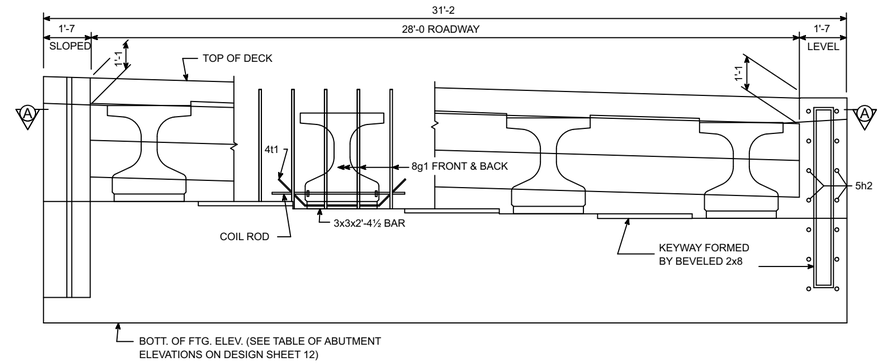

PART REAR ELEVATION AT NORTH ABUTMENT

2 | [Drawing Title]
Scale: 1:50

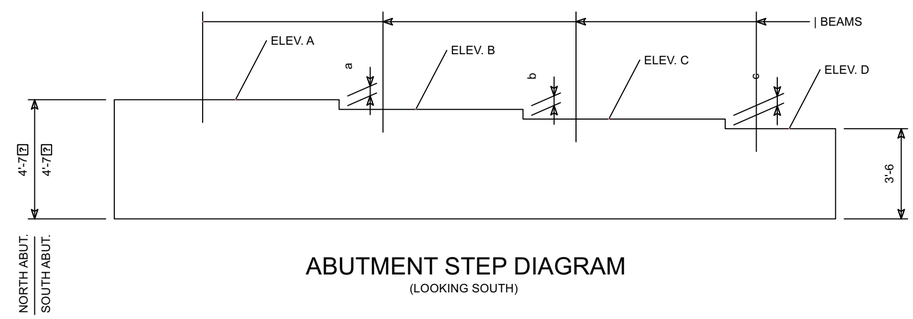

ABUTMENT STEP DIAGRAM
(LOOKING SOUTH)

3 | [Drawing Title]
Scale: 1:50

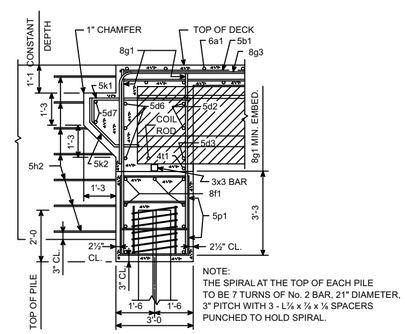

PART SECTION B-B

5 | [Drawing Title]
Scale: 1:50

Semantic Data Requirements & Notes

IfcBuiltElement	IfcWall			
		IfcWall.Name	AbutmentWall-A01	
IfcBuiltElementType				

PRELIMINARY

No.	Date	Issue/Revision Notes

BIM FOR BRIDGES AND STRUCTURES TPF-5(372)

Design Firm: HDR, Inc. Omaha, NE	Unit Test Name:	Project Manager / Date	Project ID: 123456789
Consultant: Jeffrey W. Ouellette, Sr. Advisor, Software Vendor Engagement	Sheet Title: Abutment, Concrete	Drawn By: J. Ouellette / Reviewed By	Sheet No.
		CAD File Name: 4_Polk Ramp B over UPRR_Design 2118_2022.vwx	L1-AbutmentWall01