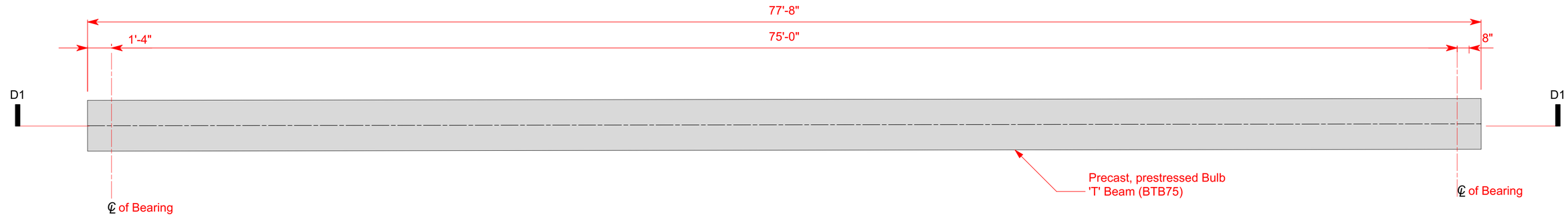

G1 Plan

Scale: 1/4" = 1'-0"

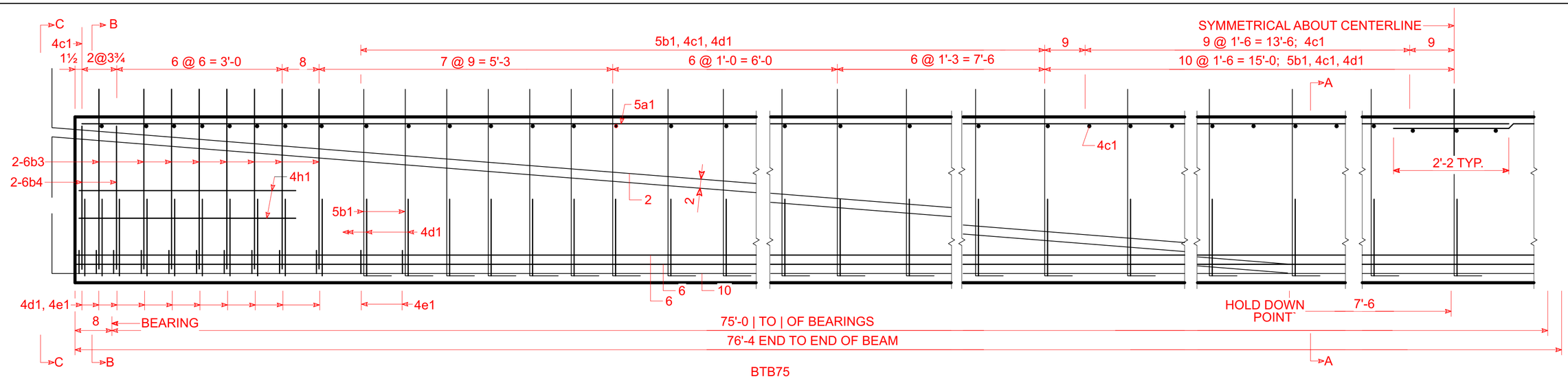

D1 Reinforcing Details [Section]

Scale: 3/4" = 1'-0"

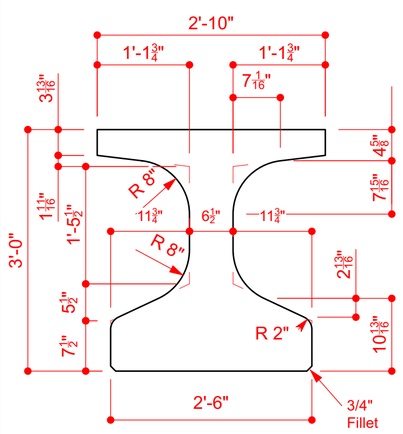

BEAM SECTION PROPERTIES

AREA = 631.7 in²

$\bar{y}_b$ = 17.14 in

I = 99,980 in⁴

A1 Beam Section

Scale: 3/4" = 1'-0"

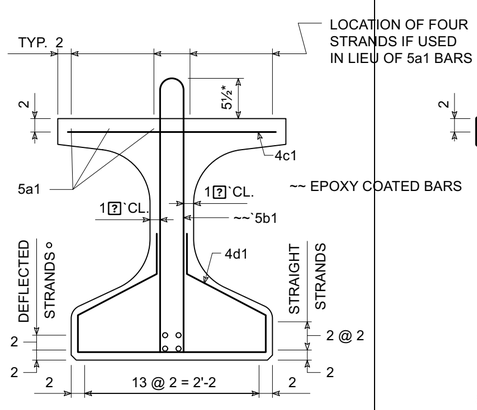

SECTION A-A

A2 Reinforcing Detail A

Scale: 3/4" = 1'-0"

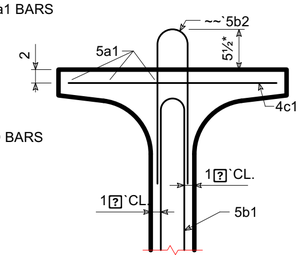

SECTION A-A (ALTERNATE)

SEE ALTERNATE BAR NOTE ON DESIGN SHEET 19.

5 Reinforcing Detail A (ALT)

Scale: 3/4" = 1'-0"

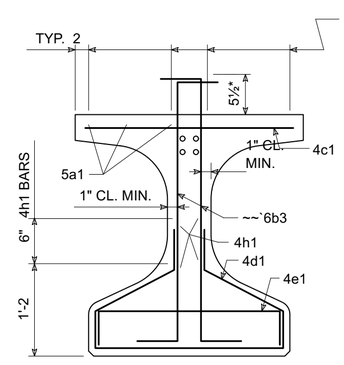

SECTION B-B

6 Beam Reinforcing Detail B

Scale: 3/4" = 1'-0"

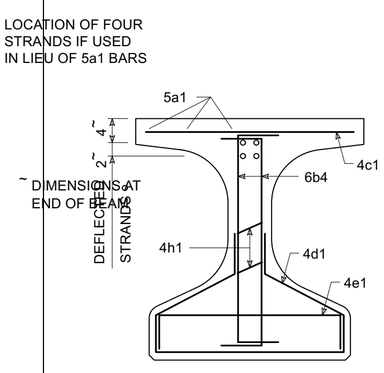

SECTION C-C

7 Beam Reinforcing Detail C

Scale: 3/4" = 1'-0"

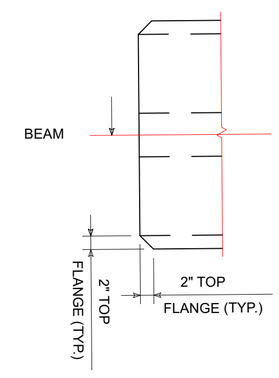

THE TOP FLANGE BEAM CORNERS ARE TO BE CHAMFERED 2" AS SHOWN AT BOTH ENDS OF THE BEAM.

8 Beam End Detail

Scale: 3/4" = 1'-0"

PRELIMINARY

No.	Date	Issue/Revision Notes

BIM FOR BRIDGES AND STRUCTURES TPF-5(372)

Design Firm: HDR, Inc. Omaha, NE

Consultant: Jeffrey W. Ouellette, Sr. Advisor, Software Vendor Engagement

Unit Test Name:

Sheet Title: Beam, Precast Conc, Bulb T

Project Manager | Date | Drawn By: J. Ouellette | Reviewed By

CAD File Name: 4_Polk Ramp B over UPRR_Design 2118_2022.vwx

Project ID: 123456789

Sheet No.: L1-Beam01a

BENT BAR DETAILS

NOTE: ALL BAR DIMENSIONS ARE OUT TO OUT
D = PIN DIAMETER FOR BENDING
(`UNLESS OTHERWISE SHOWN)
#4 BAR D= 2"
#5 BAR D= 2½"
#6 BAR D= 4½"

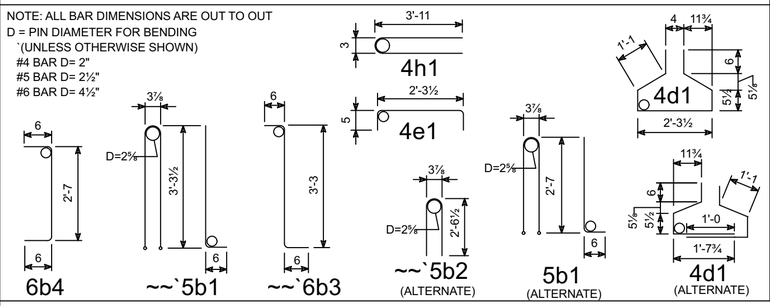

REINFORCING BAR LIST

BEAM		BTB65		BTB70		BTB75	
BAR	SHAPE	NO.	LENGTH	NO.	LENGTH	NO.	LENGTH
5a1		12	34'-2	12	36'-8	12	39'-2
5a2		—	—	—	—	—	—
5b1		49	7'-9	53	7'-9	57	7'-9
6b3		36	4'-3	32	4'-3	32	4'-3
6b4		4	3'-7	8	3'-7	8	3'-7
4c1		83	2'-7	89	2'-7	95	2'-7
4d1		69	6'-5	73	6'-5	77	6'-5
4e1		24	3'-2	24	3'-2	24	3'-2
4h1		4	8'-0	4	8'-0	4	8'-0

G1 Bent Bar Details

Scale: 1/2" = 1'-0"

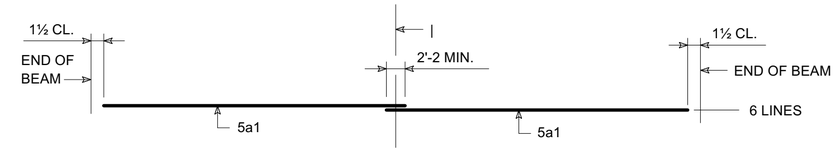

TOP FLANGE LONGITUDINAL BAR LAYOUT

NOTE: STIRRUP EXTENSION

* THE STANDARD 5" PROJECTION HAS BEEN INCREASED.

G4 Beam Reinforcing Detail

Scale: 3/4" = 1'-0"

BTB BEAM DATA

BTB BEAM	SPAN LENGTH | BEARING	OVERALL BEAM LENGTH (L)	CONCRETE STRENGTH f'ci (ksi)	CONCRETE STRENGTH f'c (ksi)	STRAND SIZE DIA. (in)	NO. OF STRAND STRAIGHT	NO. OF STRAND DEFLECTED	③ TOTAL INITIAL PRESTRESS kips	HOLD DOWN FORCE-kips	CAMBER (in) AT RELEASE	CAMBER (in) AFTER LOSSES	DEFLECTION (in) ~ D IMMEDIATE (ELASTIC) ~ ① STEEL DIAPHRAGM	DEFLECTION (in) ~ D TIME (PLASTIC) ~ ② STEEL DIAPHRAGM	PERMISSIBLE MAXIMUM SPACING HL-93 LOADING STEEL DIAPHRAGM	WEIGHT (TONS)	CONCRETE (CU YD.)	REINFORCING STEEL (WEIGHT-LBS)
BTB65	65'-0	66'-4	4.5	5.0	0.60	18	2	851	8.0	1.13	2.01	0.83	0.21	8'-2	21.8	10.8	1586
BTB70	70'-0	71'-4	5.0	5.5	0.60	20	2	936	7.4	1.32	2.35	1.06	0.26	8'-2	23.5	11.6	1674
BTB75	75'-0	76'-4	5.5	6.5	0.60	22	4	1106	13.0	1.65	2.92	1.28	0.32	8'-2	25.1	12.4	1764

① DEFLECTIONS AT MID-SPAN DUE TO WEIGHT OF SLAB AND DIAPHRAGM. THE DEFLECTIONS SHOWN ARE FOR A SLAB (`8.5 in`) AND HAUNCH (`1.5 in`) WEIGHT OF:
0.92 kips/ft FOR 8'-2 BEAM SPACING
AND ONE STEEL DIAPHRAGM (0.500 kips`) AT | OF SPAN.
FOR DIFFERENT SLAB AND DIAPHRAGM WEIGHTS, DEFLECTIONS WILL BE DIRECTLY PROPORTIONAL.
② DEFLECTIONS DUE TO THE COMBINED EFFECT OF CREEP DUE TO WEIGHT OF SLAB AND SHRINKAGE OF SLAB.
TOTAL BEAM DEFLECTIONS AT | OF SPAN, ~ , DUE TQ WEIGHT OF SLAB AND DIAPHRAGMS FOR DETAILING PURPOSE:
(A) ~ ₹~ +₹ FQR SIMPLE SPAN.
(B) ~ ₹~ +½~ FQR END SPANS OF CONTINUOUS BRIDGE.
(C) ~ ₹~ +½~ FQR INTERIOR SPANS OF CONTINUOUS BRIDGE.
③ TOTAL INITIAL PRESTRESS IS BASED ON 72.6% fs, fs. = 270 ksi. AND As = 0.217 in²

CALCULATED DESIGN CAMBERS HAVE BEEN REDUCED FROM THEIR THEORETICAL VALUES BY 15% TO AID CONSTRUCTABILITY.

DESIGN STRESSES:

DESIGN STRESSES FOR THE FOLLOWING MATERIALS ARE TO BE IN ACCORDANCE WITH AASHTO LRFD BRIDGE DESIGN SPECIFICATIONS FOR HIGHWAY BRIDGES, SERIES OF 2007.

REINFORCING STEEL IN ACCORDANCE WITH SECTION 5, GRADE 60.

CONCRETE IN ACCORDANCE WITH SECTION 5.

PRESTRESSING STEEL IN ACCORDANCE WITH SECTION 5, GRADE 270.

SPECIFICATIONS:

CONSTRUCTION: STANDARD SPECIFICATIONS OF THE IOWA DEPARTMENT OF TRANSPORTATION, CURRENT SERIES, WITH CURRENT APPLICABLE SPECIAL PROVISIONS AND SUPPLEMENTAL SPECIFICATIONS.

DESIGN: A.A.S.H.T.O. LRFD, SERIES OF 2007, WITH MINOR MODIFICATIONS.

ALTERNATE BAR NOTES:

ALTERNATE BARS SHOWN IN BENT BAR DETAILS MAY BE USED IN LIEU OF REINFORCING BARS SHOWN IN BAR LIST. NO ADDITIONAL PAYMENT SHALL BE MADE FOR USE OF ALTERNATE BARS.

BEAM NOTES:

THESE BEAMS ARE DESIGNED FOR AASHTO LIVE LOADS AS INDICATED IN ABOVE TABLE WITH AN ALLOWANCE OF 20 LBS PER SQUARE FOOT OF ROADWAY FOR FUTURE WEARING SURFACE.

ALL PPC BEAMS SHALL USE HIGH PERFORMANCE CONCRETE (`HPC`) IN ACCORDANCE WITH THE STANDARD SPECIFICATIONS.

HOLD DOWN POINTS FOR DEFLECTED STRANDS MAY BE MOVED TOWARD ENDS OF BEAM A DISTANCE OF 0.05 L MAXIMUM AT PRODUCER'S OPTION.

ALL PRESTRESSING STRANDS EXCEPT LIFTING LOOP STRANDS SHALL BE 0.60 in. NOMINAL DIAMETER (NOMINAL STEEL AREA = 0.217 in²) AND CONFORM TO ASTM A416 GRADE 270 LOW RELAXATION STRANDS. MINIMUM STRAND BREAKING STRENGTH SHALL BE 58.6 kips.

TOPS OF BEAMS ARE TO BE STRUCK OFF LEVEL AND FINISHED AS PER MATERIALS IM570.

BEARINGS SHALL BE AS DETAILED ON OTHER DESIGN SHEETS.

BEAMS TO BE USED IN BRIDGES MADE CONTINUOUS BY THE POURED IN PLACE FLOOR, ARE TO BE AT LEAST 28 DAYS OLD BEFORE THE FLOOR IS PLACED UNLESS A SHORTER CURING TIME IS APPROVED BY THE BRIDGE ENGINEER.

THE PORTIONS OF THE PRESTRESSED BEAMS THAT ARE TO BE EMBEDDED IN THE ABUTMENT AND PIER DIAPHRAGMS SHALL BE ROUGHENED FOR A DISTANCE OF 10" FROM THE BEAM END BY SANDBLASTING OR OTHER APPROVED METHODS TO PROVIDE SUITABLE BOND BETWEEN THE BEAM AND THE DIAPHRAGM IN ACCORDANCE WITH ARTICLE 2403.03, I, OF THE STANDARD SPECIFICATIONS.

ALL BEAMS ARE TO BE INCREASED IN LENGTH TO COMPENSATE FOR ELASTIC SHORTENING, CREEP AND SHRINKAGE.

FOR TRANSPORTING, THE ALLOWABLE OVERHANG IS SHOWN IN THE LIFTING LOOP AND OVERHANG TABLE.

HOLES MUST BE CAST IN THE WEB TO ACCOMMODATE THE STEEL DIAPHRAGM ATTACHMENTS AS DETAILED ON THE STEEL DIAPHRAGM DETAIL SHEET.

MINIMUM CONCRETE f'c (AT 28 DAYS) AND MINIMUM f'ci AT RELEASE ARE LOCATED IN THE BTB BEAM DATA TABLE ABOVE.

FOUR 0.60 IN. DIAMETER STRANDS STRESSED TO NOT MORE THAN 5000 lbs EACH MAY BE USED IN LIEU OF BARS 5a1 AND 5a2 IN THE TOP FLANGE.

D1 Beam Data and Notes

Scale: 1/2" = 1'-0"

NUMBER AND EXACT LOCATION OF COIL TIES TO BE AS DETAILED ON DESIGN SHEET 23.

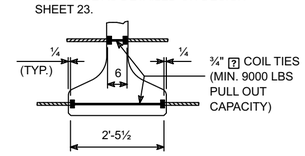

COIL TIE DETAIL

~~ 5b1 AND 6b3 BARS TO BE EPOXY COATED
* 6b3 AND 6b4 BARS TO BE USED IN PAIRS
STANDARD BAR LENGTH WAS INCREASED TO SATISFY
⊘ THE REQUIRED PROJECTION INTO THE DECK.

E4 Coil Tie Detail

Scale: 1/2" = 1'-0"

STRAND PROJECTION AT BEAM ENDS WHEN EMBEDDED IN CONCRETE END DIAPHRAGMS

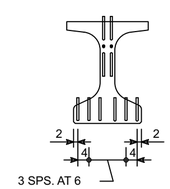

THE TOP AND BOTTOM FOR 2 ROWS OR THE TOP AND 3rd ROWS OF DEFLECTED STRANDS ARE TO BE CUT WITH 1'-6 PROJECTIONS WHICH ARE TO BE SHOP BENT AS SHOWN. THE SECOND ROW IS TO BE CUT WITH A 5" PROJECTION AND THE REMAINING TOP DEFLECTED STRANDS IN ROWS 4 AND BELOW ARE TO BE CUT FLUSH WITH BEAM FACE. SIX BOTTOM STRANDS ARE TO BE CUT WITH 1'-6 PROJECTIONS WHICH ARE TO BE SHOP BENT AS SHOWN. THE REMAINING BOTTOM STRANDS ARE TO BE CUT OFF REASONABLY FLUSH WITH THE CONCRETE.

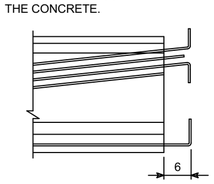

TYPICAL AT BOTH BEAM ENDS

A4 Strand Projection Detail

Scale: 1/2" = 1'-0"

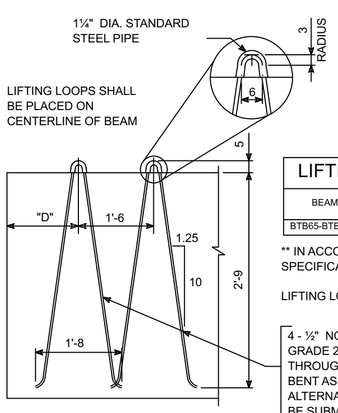

TYPICAL AT EACH END OF BEAM

LIFTING LOOP AND OVERHANG TABLE				
BEAMS	LIFTING LOOPS EACH END	# OF STRANDS PER LOOP	D	BEAM OVERHANG (FT)
BTB65-BTB75	1	4	2'-0	**

** IN ACCORDANCE WITH ARTICLE 2407.03, K OF THE STANDARD SPECIFICATIONS.

LIFTING LOOPS SHALL CARRY LOADS EQUALLY.

4 - ½" NOMINAL DIA.
GRADE 270 STRANDS THREADED
THROUGH EACH PIPE SLEEVE
BENT AS SHOWN AFTER THREADING.
ALTERNATE LIFTING DEVICES MAY
BE SUBMITTED FOR APPROVAL
(SEE LIFTING LOOP TABLE).

A1 Lifting Loop Detail

Scale: 1/2" = 1'-0"

Semantic Data Requirements & Notes

				Notes
IfcBuiltElement	IfcBeam			
		IfcBeam.Name	BTB75-A	
IfcBuiltElementType	IfcBeamType			
		IfcBeamType.Name	BTB75	
	PreDefinedType	IfcBeamTypeEnum	BEAM	
Geometry				
	Body SweptSolid Geometry			Preferred
	Body Tessellation Geometry			Optional / Fallback
Material				
	Material Single	IfcMaterial.Name	HPC	
		IfcMaterial.Category	concrete	
Pset_MaterialConcrete				
	CompressiveStrength		6.5ksi	
Pset_BeamCommon				
	FireRating		--	
	IsExternal		--	
	LoadBearing		*Derived*	
	Roll		*Derived*	
	Slope		*Derived*	
	Span		*Derived*	
	Status		NEW	
	ThermalTransmittance		--	
PSet_ConcreteElementGeneral				
	ConcreteCover			
	ConcreteCoverAtLinks			
	ConcreteCoverAtMainBars			
	ConstructionMethod			
	ConstructionToleranceClass			
	DimensionalAccuracyClass			
	ExposureClass			
	ReinforcementAreaRatio			
	ReinforcementStrengthClass			
	ReinforcementVolumeRatio			
	StrengthClass			
	StructuralClass			
Pset_PrecastConcreteElementGeneral				
	BatterAtEnd			
	BatterAtStart			
	CamberAtMidspan			
	CornerChamfer			
	DesignLocationNumber			
	FormStrippingStrength			
	HollowCorePlugging			
	InitialTension			
	LiftingStrength			
	ManufacturingToleranceClass			
	MinimumAllowableSupportLength			
	PieceMark			
	ReleaseStrength			
	Shortening			
	SupportDuringTransportDescription			
	SupportDuringTransportDocReference			
	TendonRelaxation			
	TransportationStrength			
	Twisting			
	TypeDesignation			
Qto_BaseQuantities	Length			
	CrossSectionArea			
	OuterSurfaceArea			
	GrossSurfaceArea			
	GrossVolume			
	NetVolume			
	GrossWeight			
	NetWeight			

PRELIMINARY

No.	Date	Issue/Revision Notes

BIM FOR BRIDGES AND STRUCTURES TPF-5(372)

Design Firm: HDR, Inc. Omaha, NE	Unit Test Name:	Project Manager	Date	Project ID: 123456789
Consultant: Jeffrey W. Ouellette, Sr. Advisor, Software Vendor Engagement	Sheet Title: Beam, Precast Conc, Bulb T	Drawn By: J. Ouellette	Reviewed By	Sheet No.
		CAD File Name: 4_Polk Ramp B over UPRR_Design 2118_2022.vwx		L1-Beam01b