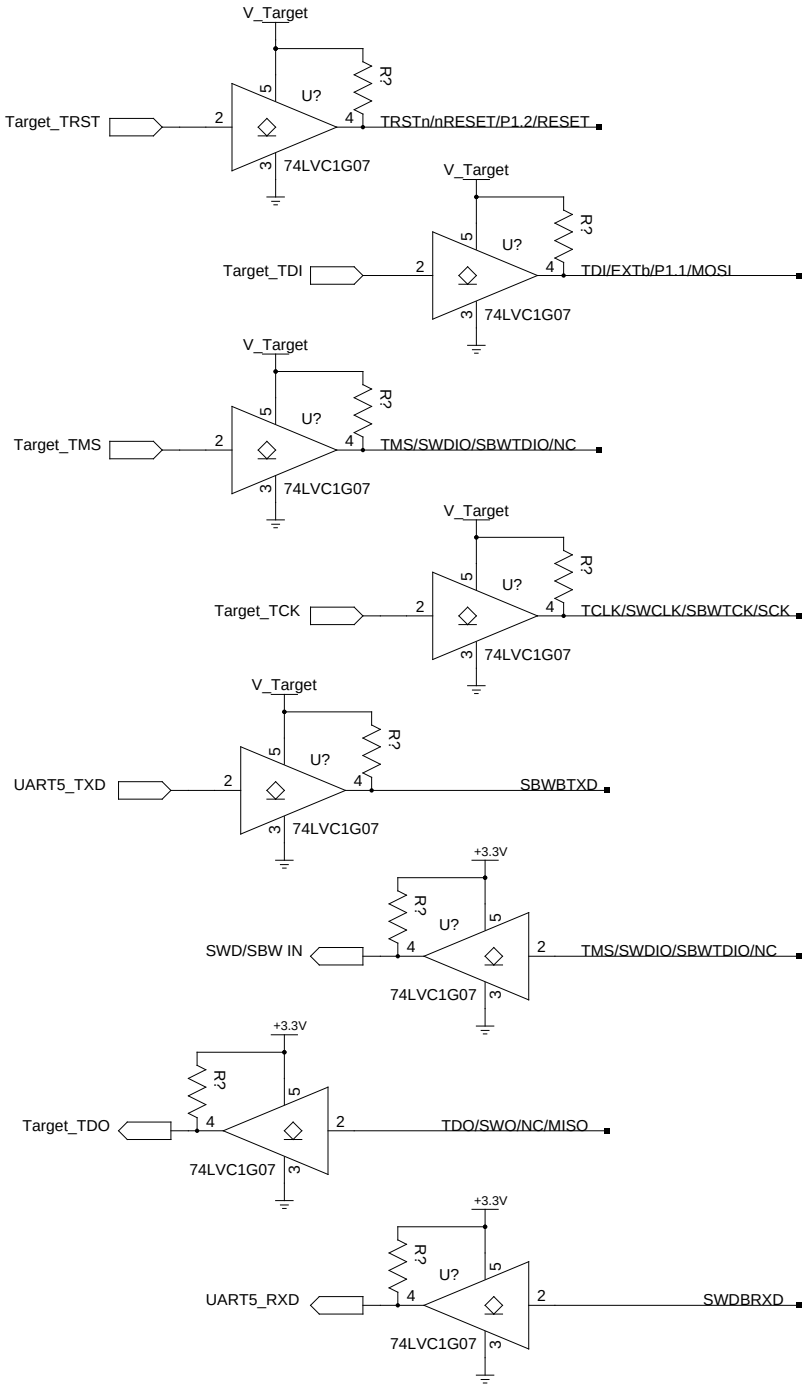


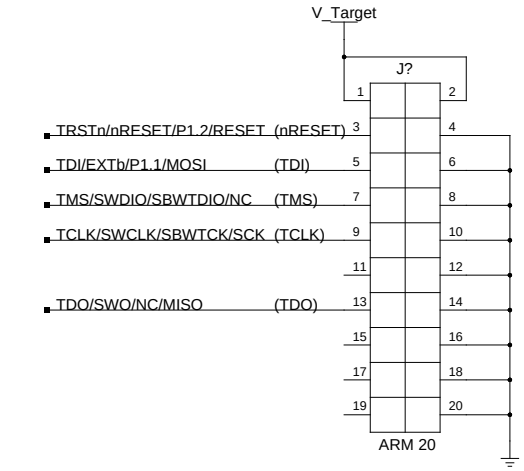


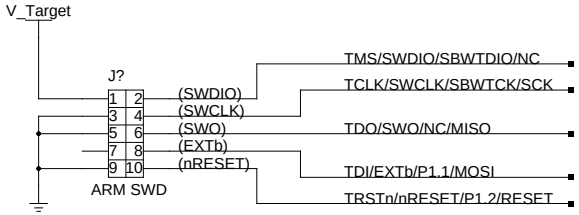


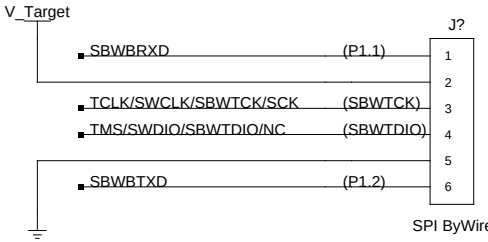


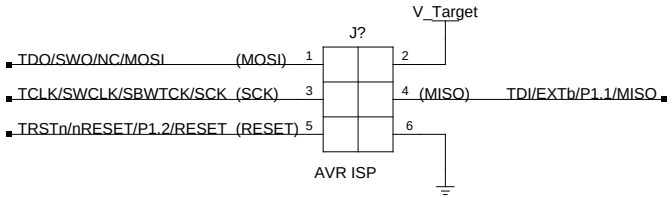


| | | | |
|---|---|---|---|
| TITLE | BeagleBone JTAG Programmer/Debugger | | |
| FILE: | Bone_JTAG_PG2.sch | REVISION: | 0.9 |
| PAGE 2 | OF 4 | DRAWN BY: | Tom King |