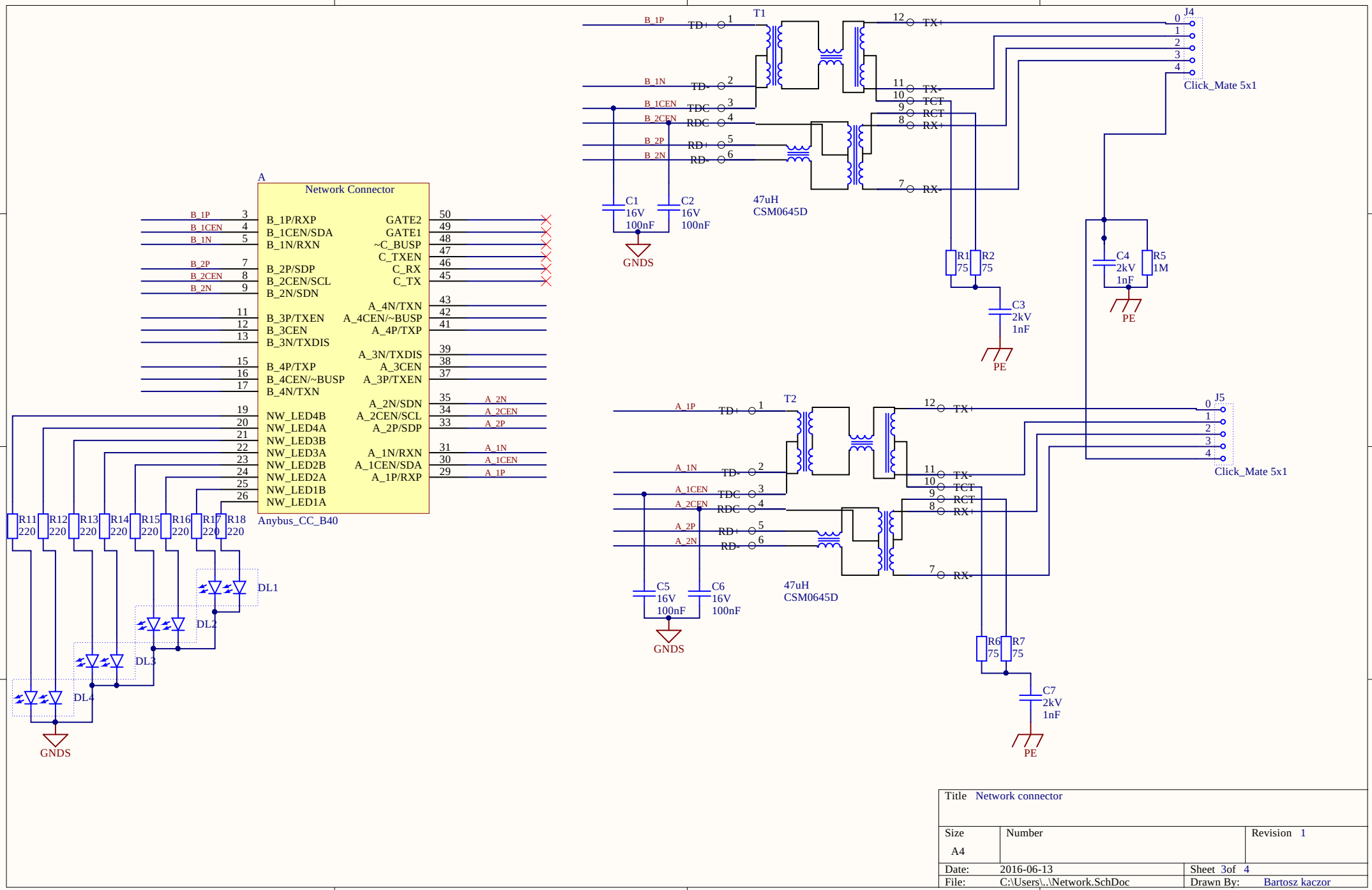

Title	Network connector	
Size A4	Number	Revision 1
Date: 2016-06-13		Sheet 3of 4
File: C:\Users\..\Network.SchDoc		Drawn By: Bartosz kaczor