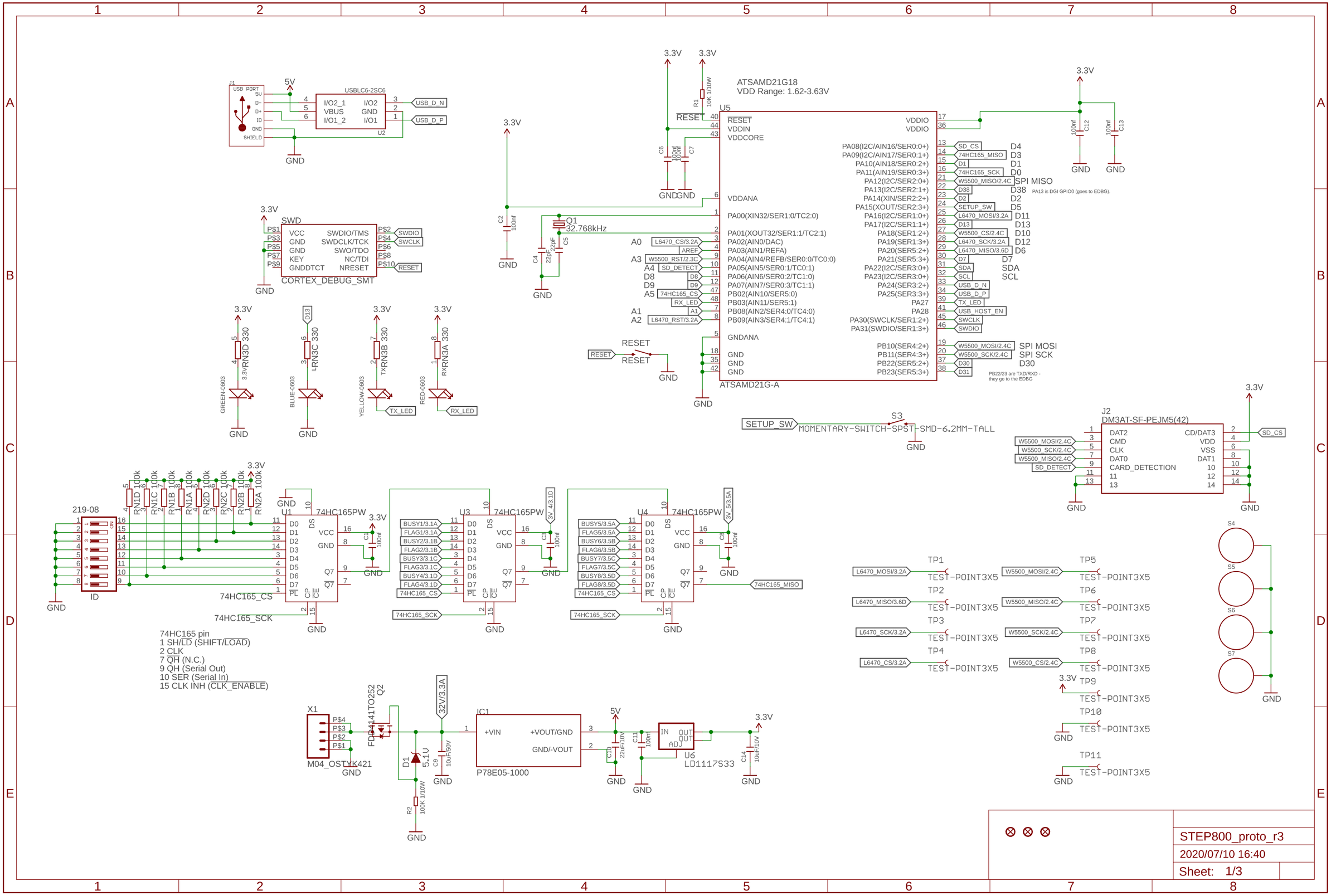

2020/07/10 16:40 C:\Users\kanta\Dropbox\eagle\2002_STEP800\STEP800_proto_r3.sch (Sheet: 1/3)

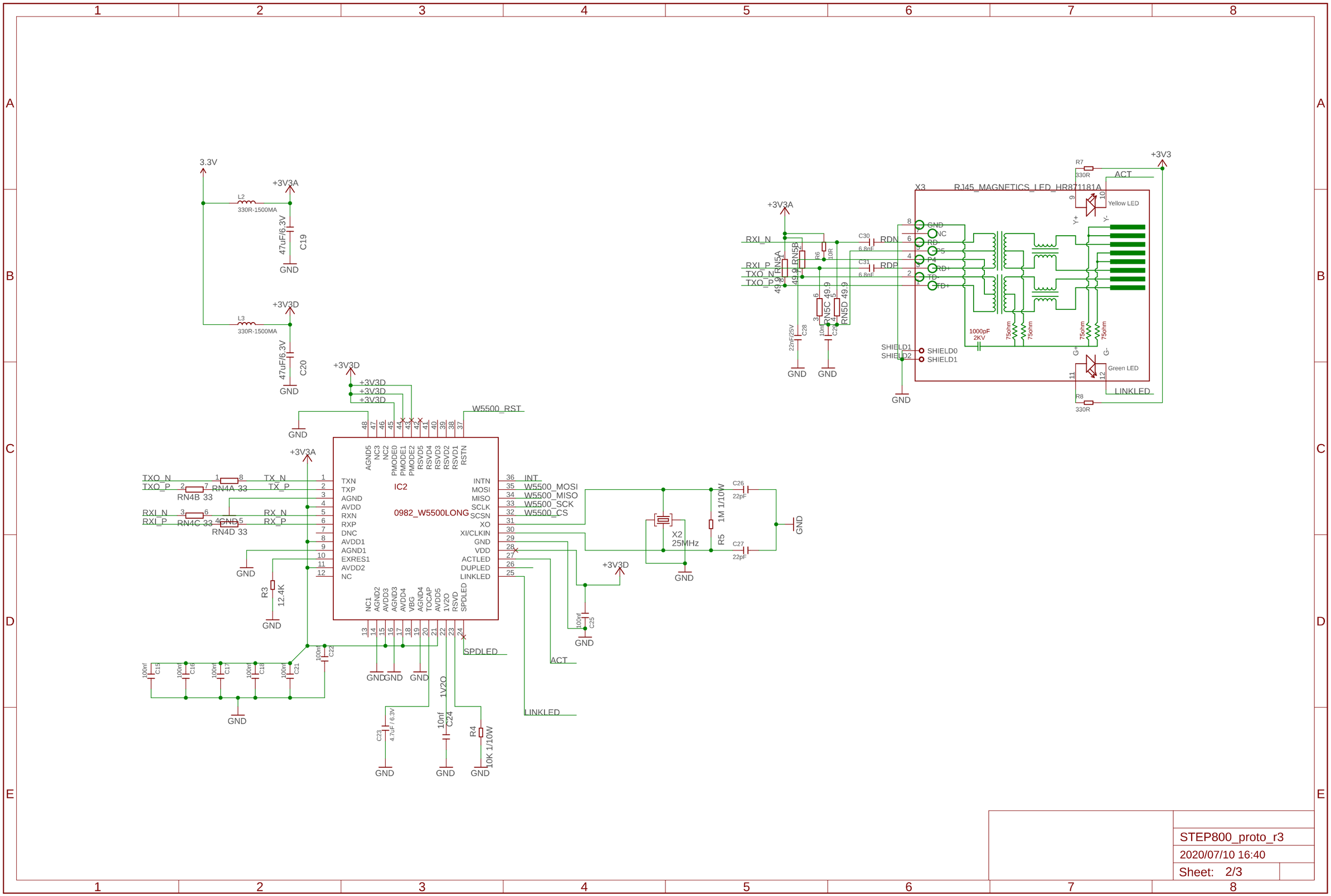

STEP800_proto_r3
2020/07/10 16:40
Sheet: 2/3

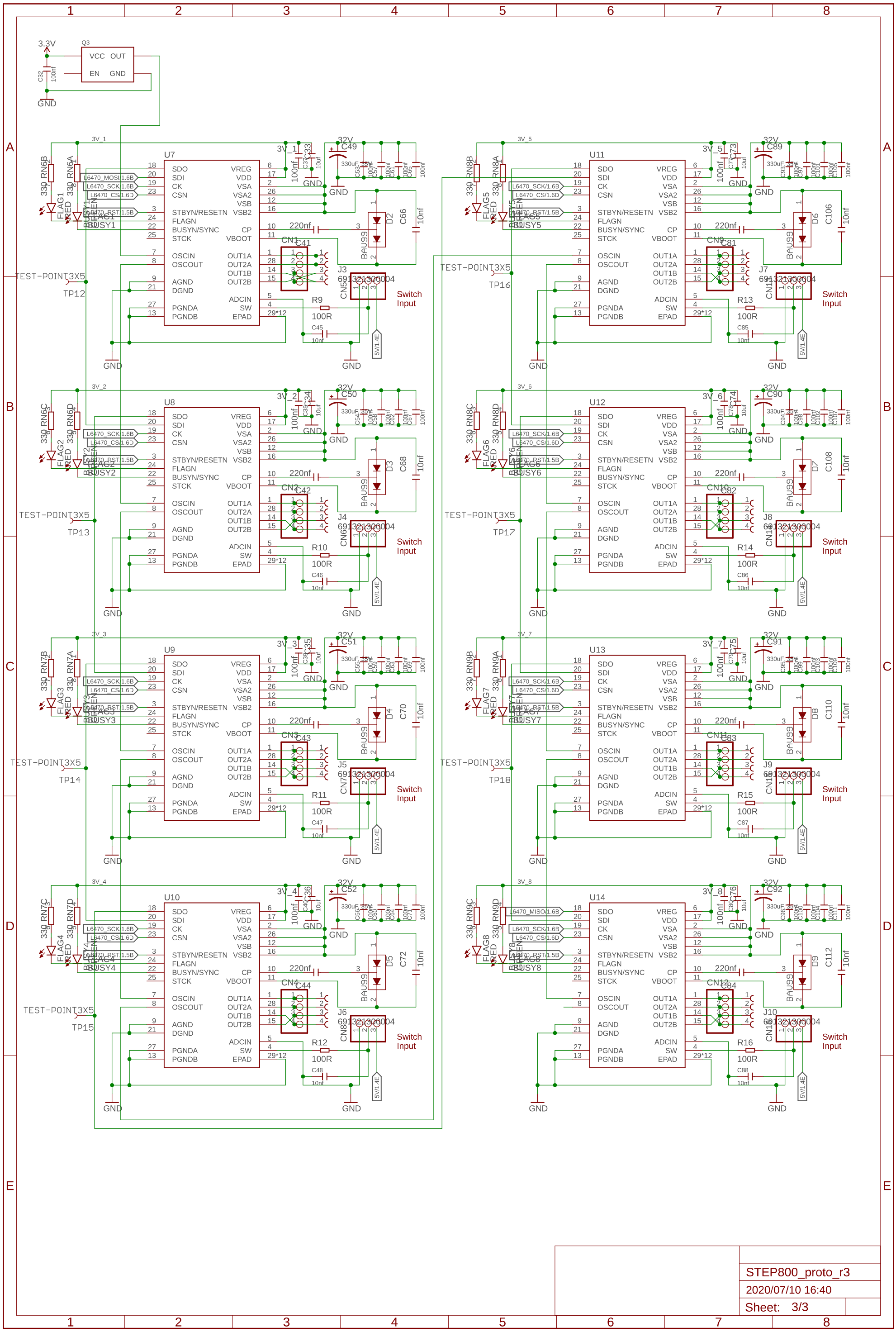
STEP800_proto_r3
2020/07/10 16:40
Sheet: 3/3