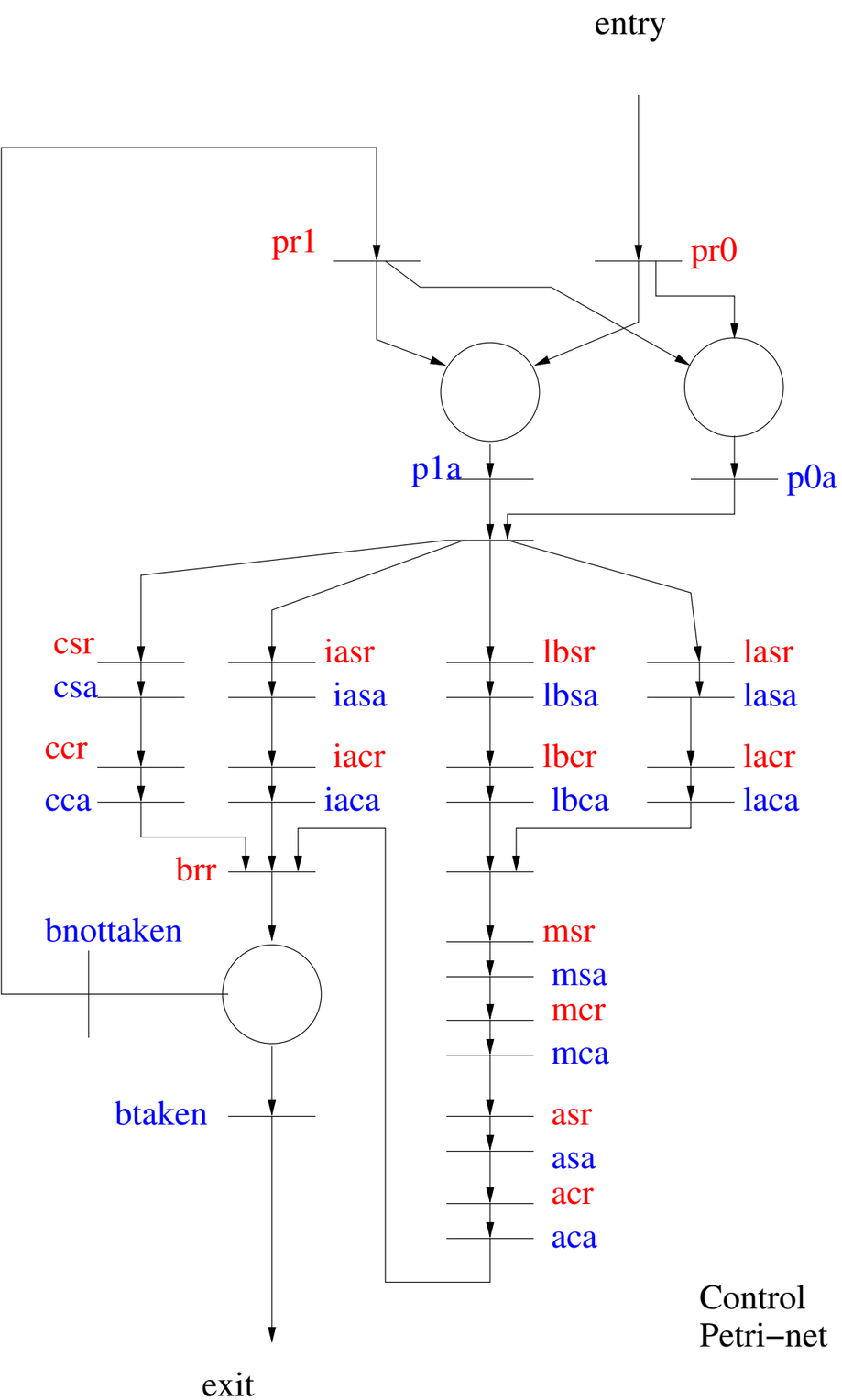
entry
pr1
pr0
p1a
p0a
csr
csa
ccr
cca
iasr
iasa
iacr
iaca
lbsr
lbsa
lbcr
lbca
lasr
lasa
lacr
laca
brr
bnottaken
btaken
msr
msa
mcr
mca
asr
asa
acr
aca
exit
Control
Petri−net

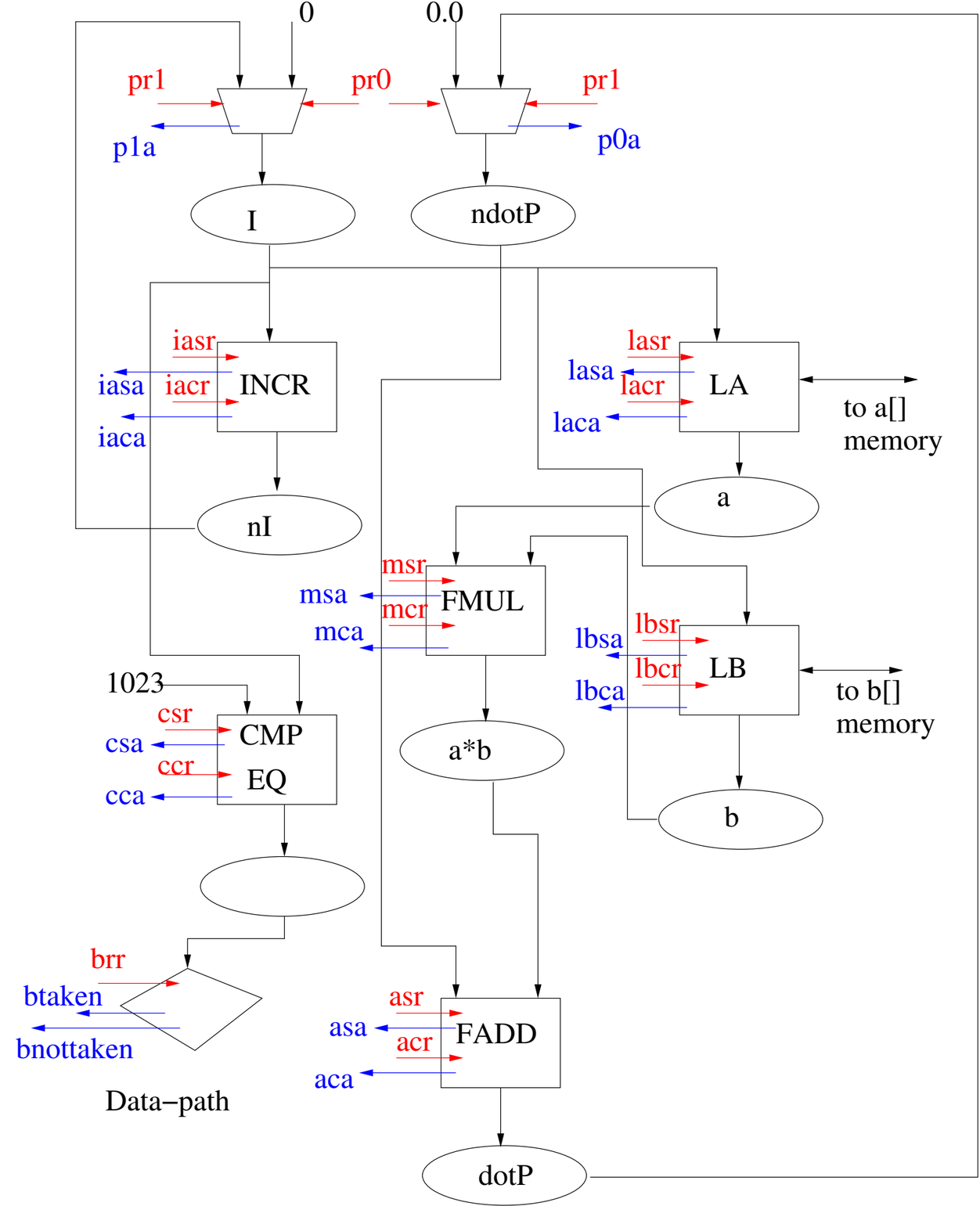
0
0.0
pr1
pr0
pr1
p1a
p0a
I
ndotP
iasr
iasa
iacr
iaca
INCR
nI
lasr
lasa
lacr
laca
LA
to a[]
memory
a
msr
msa
mcr
mca
FMUL
lbsr
lbsa
lbcr
lbca
LB
to b[]
memory
b
1023
csr
csa
ccr
cca
CMP
EQ
a*b
brr
btaken
bnottaken
asr
asa
acr
aca
FADD
Data−path
dotP