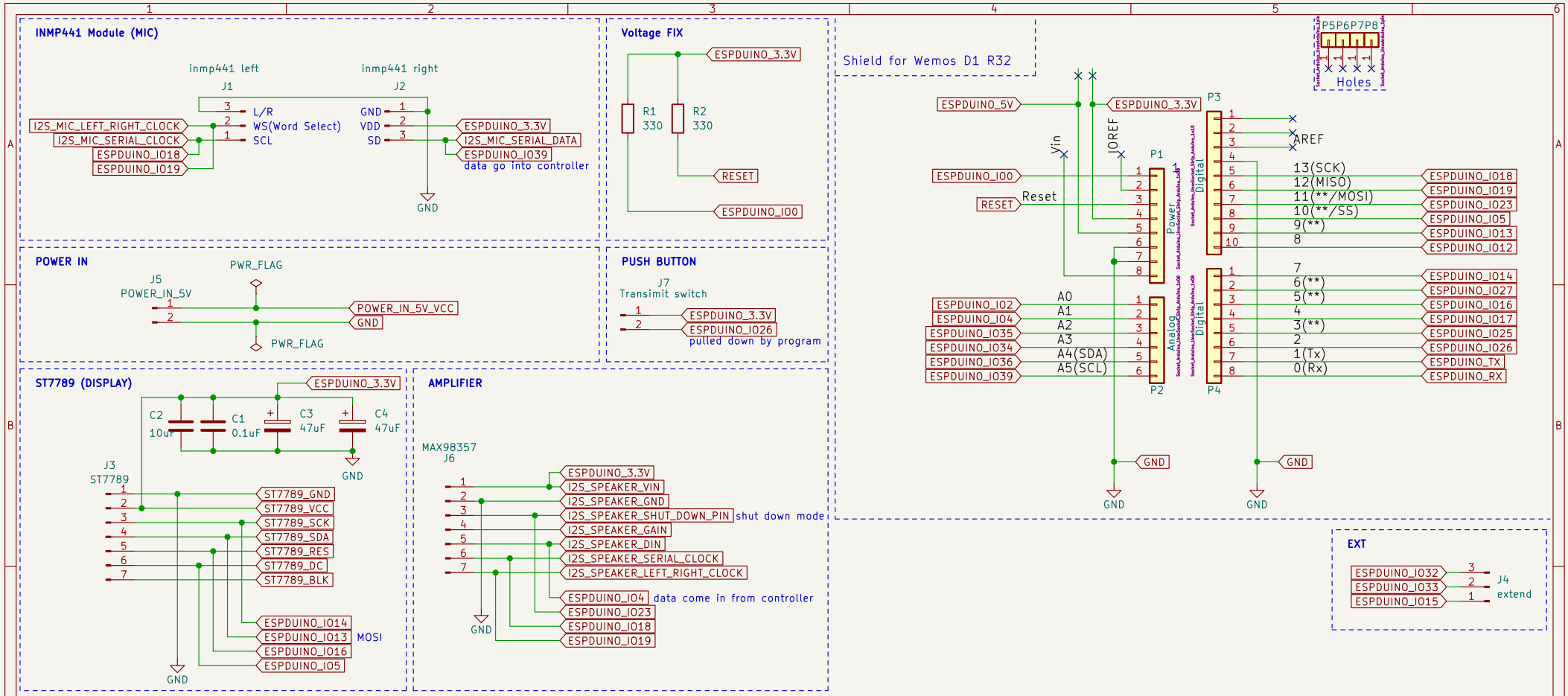

Sheet: /
File: esp32-walkie-talkie-v2.kicad_sch

Title: ESP32 Walkie Talkie v2

Size: A4	Date: 2022-06-21	Rev:
KiCad E.D.A. kicad (6.0.5-0)		Id: 1/1