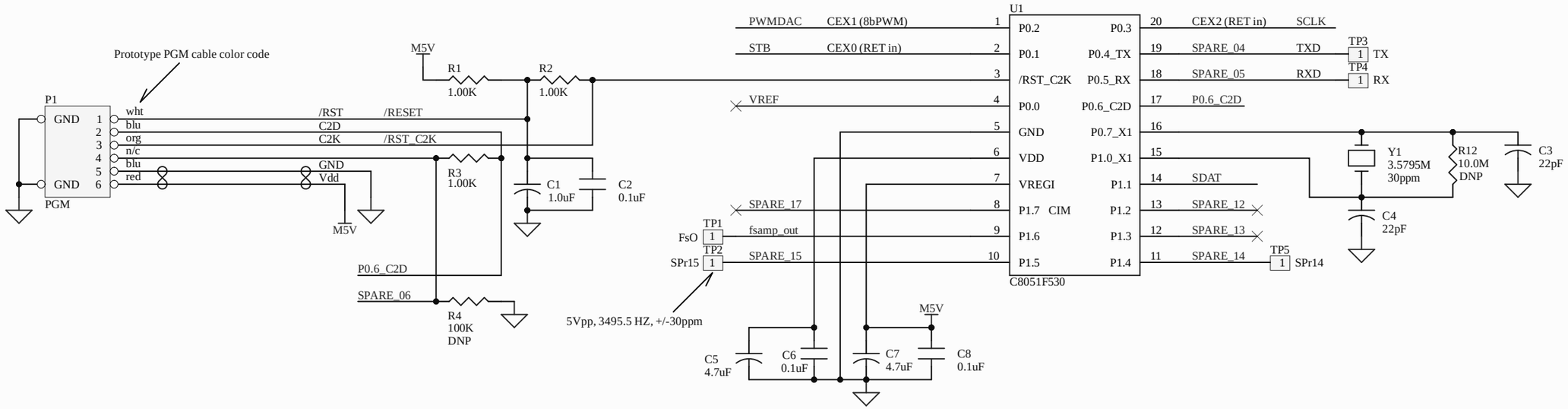

TONE_OUT feeds the modulator with CTCSS (or DSQ) tones.
DETO (n/c) is the recive audio to drive a tone decoder.
TSQL (n/c) is the tone decode output (0 = decode).
ENC tells the radio that an encoder is present.
OPT1 (n/c) tells the radio that a UT-40 is installed.
SDAT, STB, and SCLK are the serial data signals.

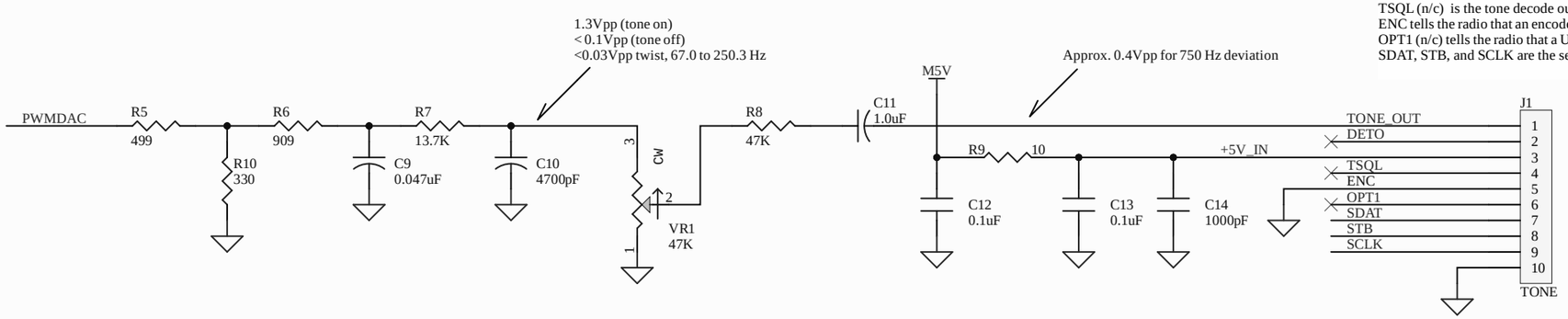

Tone Output Equivalent Circuit

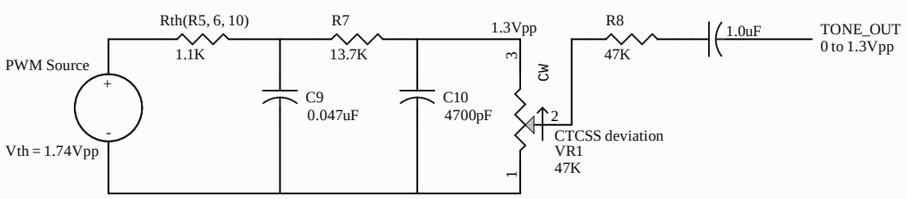

Title	**IC-901 Tone Unit (Clone)**		
Size B	Number UT-39x-901 Designed by Joe Haas, KE0FF		Revision **A**
Date: 1/04/2022		Sheet of	
File: C:\Users\..\IC901_ToneEnc.SchDoc		Drawn By: KE0FF	