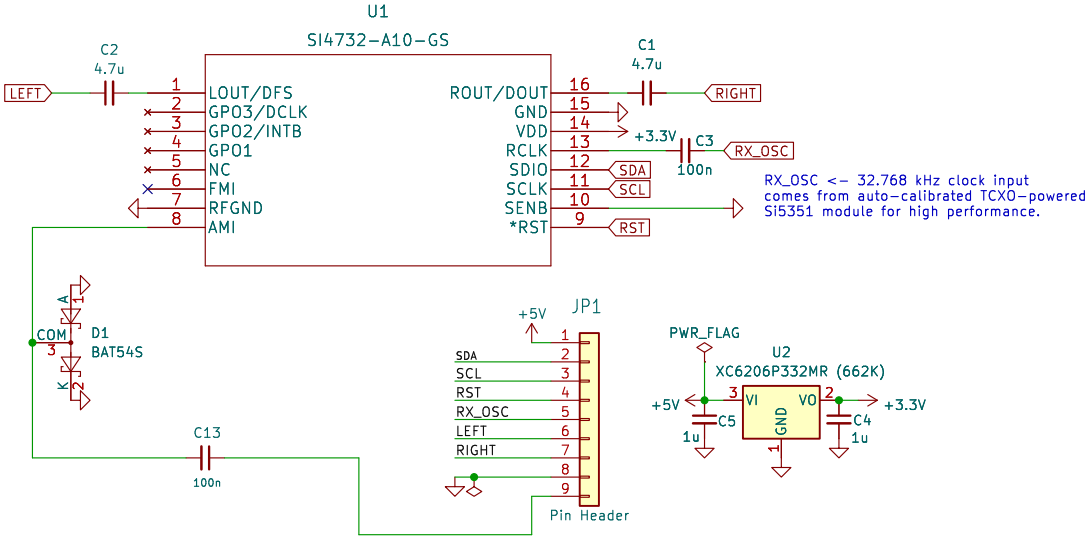

ATTENTION: Use a modern 3.3v compatible MCU (Pico, ESP32, ESP8266, and others).

Contact Dhiru (VU3CER) for sample code.

Note: All SMD caps are 1206 sized.

Dhiru Kholia (VU3CER)

Sheet: /

File: BoB.kicad_sch

Title: Breakout board (BoB) for Si4732 for HF

Size: User	Date: 2024-01-18	**Rev: v4.02**
KiCad E.D.A. 8.0.0		Id: 1/1