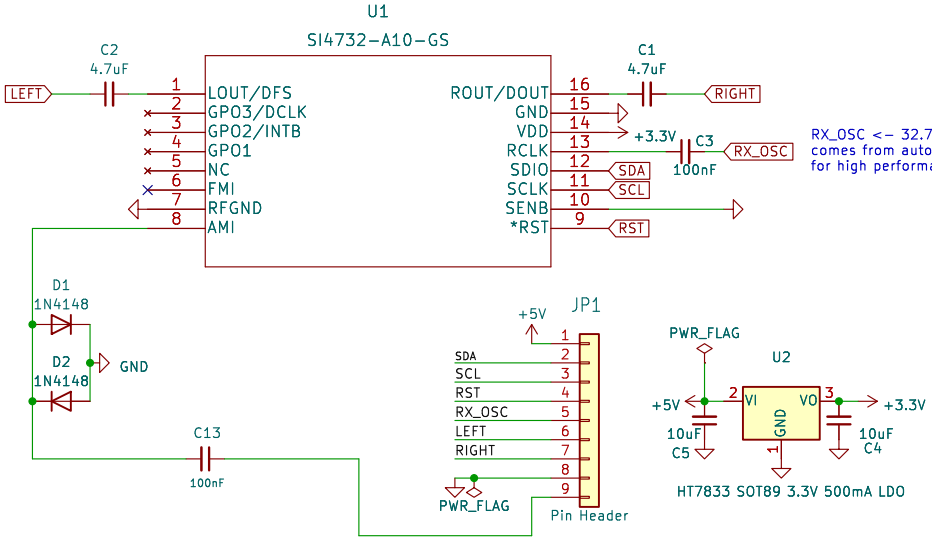

ATTENTION: Use a modern 3.3v compatible MCU (Pico, ESP32, ESP8266, and others).

Contact Dhiru (VU3CER) for sample code.

Note: All SMD caps are 1206 sized.

Tip: There is NO need to solder the middle leg to the 3.3v LDO.

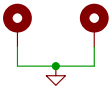

Dhiru Kholia (VU3CER)

Sheet: /
File: BoB.kicad_sch

Title: Breakout board (BoB) for Si4732 for HF

Size: User	Date: 2023-02-17	**Rev: v0.01**
KiCad E.D.A. kicad 7.0.0-da2b9df05c~162~ubuntu22.04.1		Id: 1/1