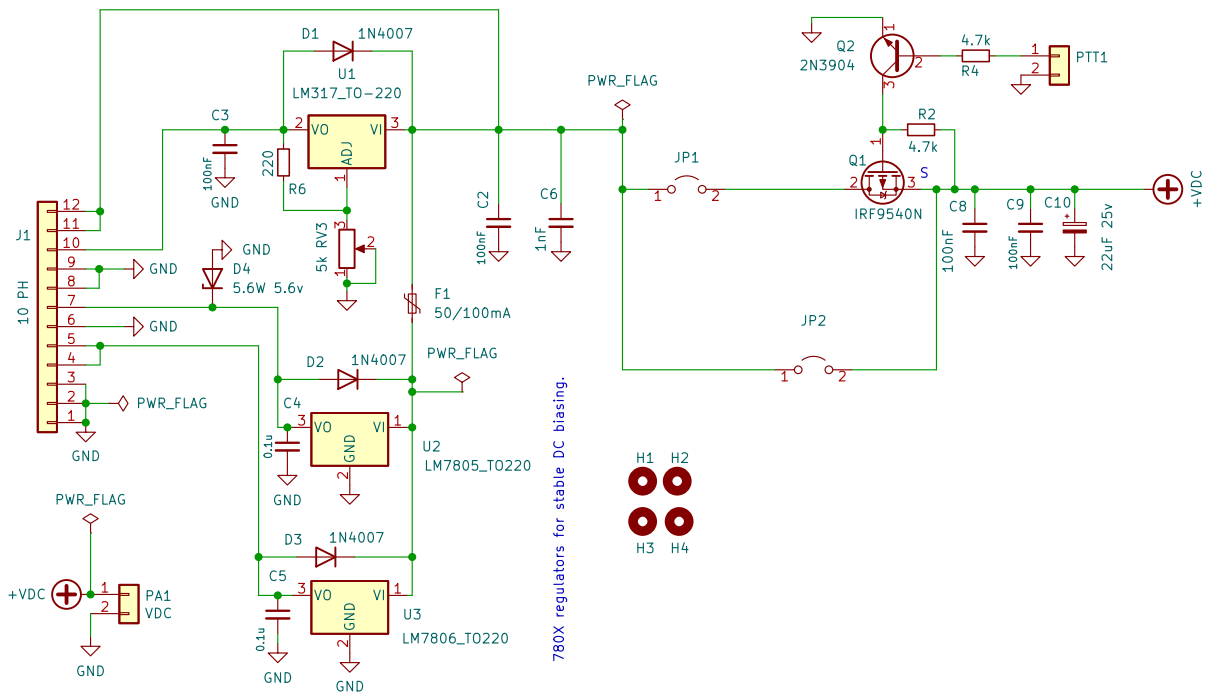

Dhiru Kholia (VU3CER)

Sheet: /

File: Power.kicad_sch

Title: Power Block

Size: User	Date: 2022-03-13	**Rev:**
KiCad E.D.A. eeschema 6.0.4-6f826c9f35~116~ubuntu21.10.1		Id: 1/1