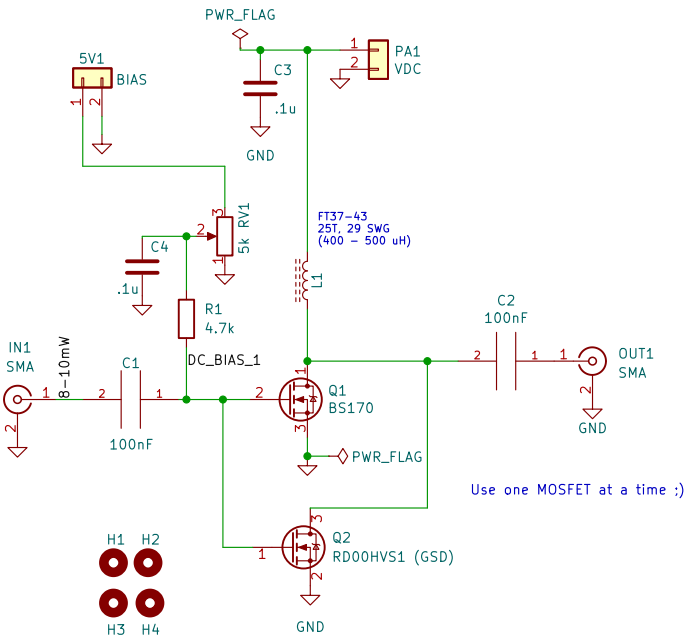

RF_IN -> ACT00 -> Voltage Divider -> BS170 chain

Dhiru Kholia (VU3CER)

Sheet: /

File: Driver.kicad_sch

Title: Experimental-Driver Block

Size: User	Date: 2022-03-13	**Rev:**
KiCad E.D.A. eeschema 6.0.4-6f826c9f35~116~ubuntu21.10.1		Id: 1/1