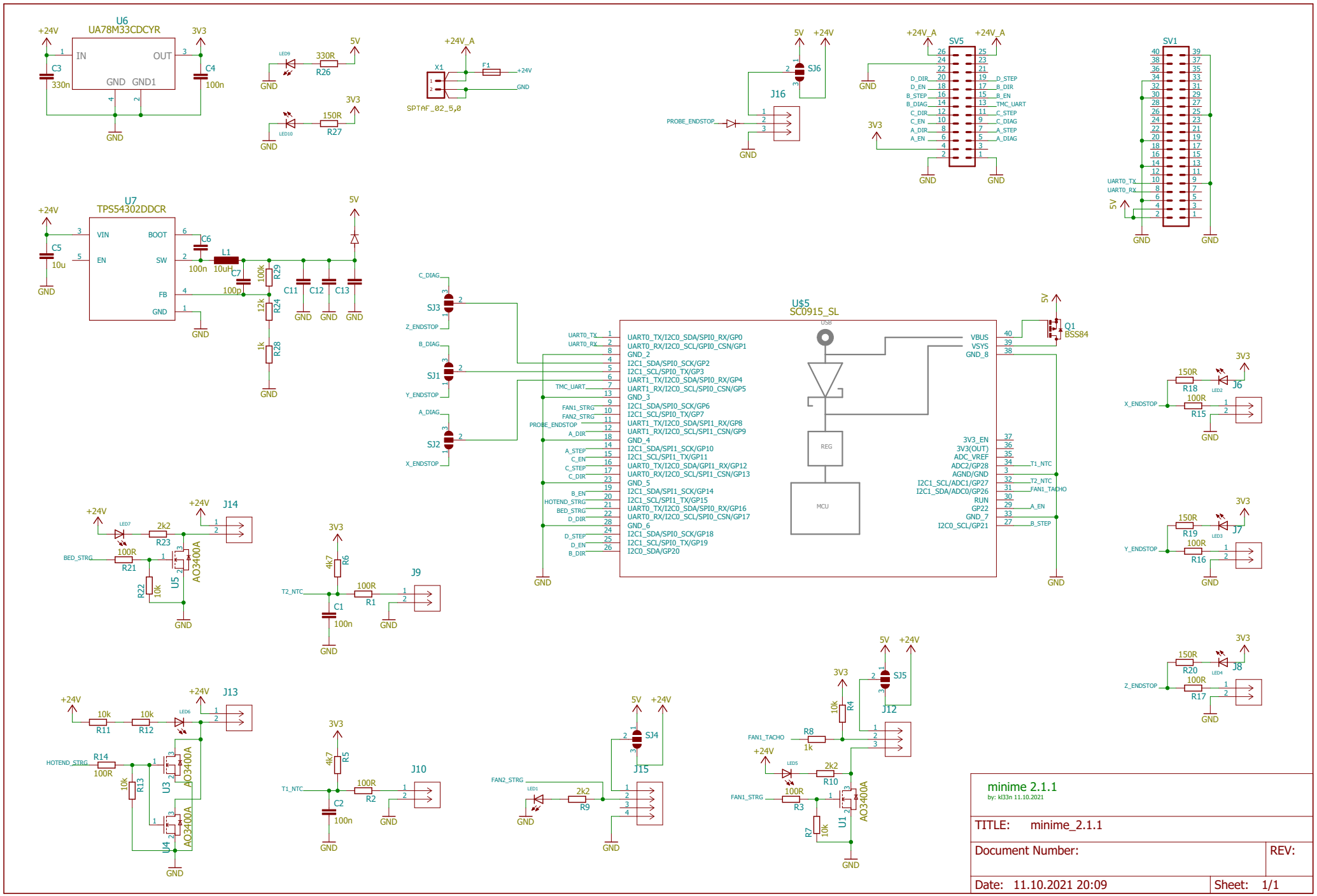

minime 2.1.1
by: kl33n 11.10.2021

TITLE: minime_2.1.1	
Document Number:	REV:
Date: 11.10.2021 20:09	Sheet: 1/1