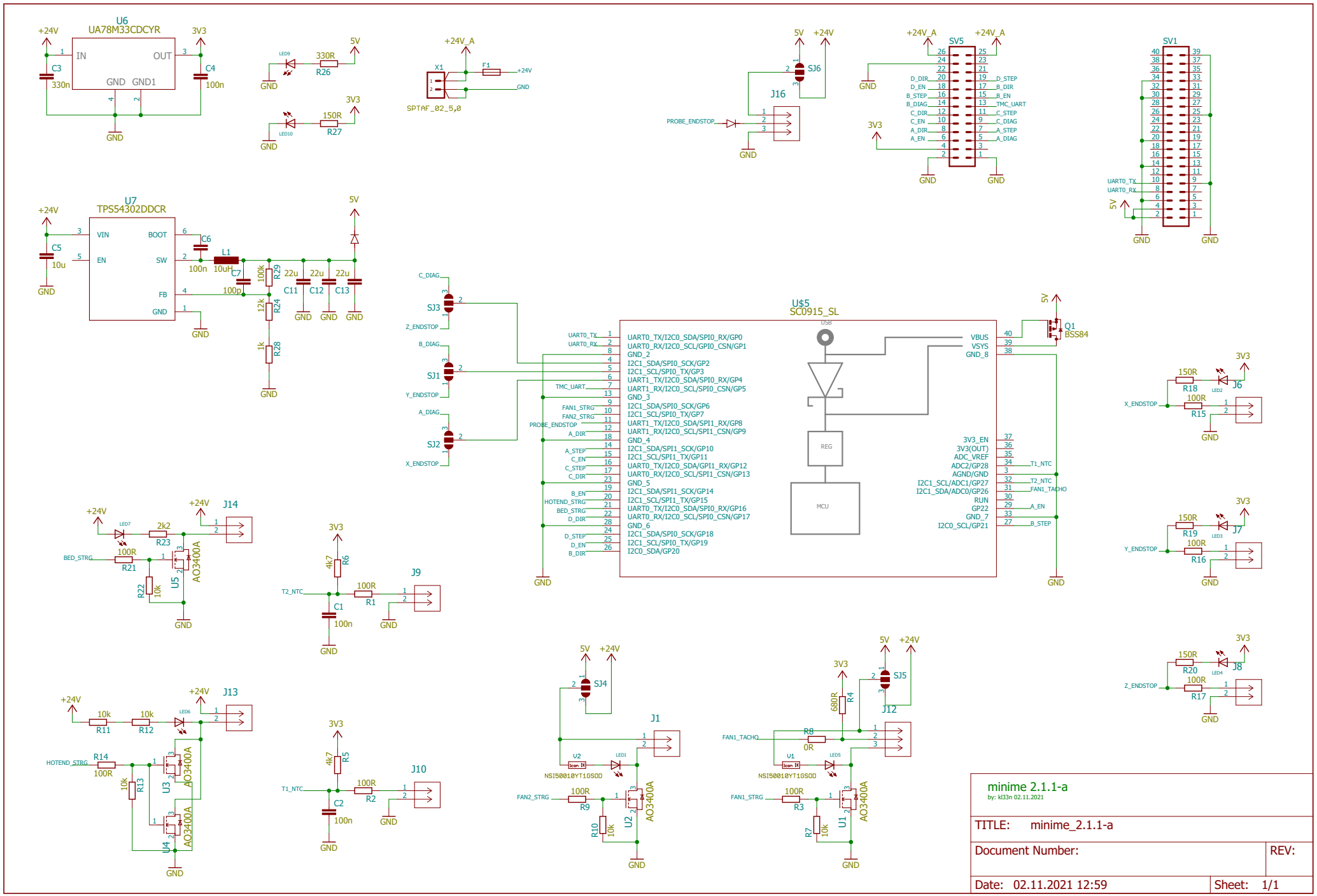

minime 2.1.1-a
by: kl33n 02.11.2021

TITLE: minime_2.1.1-a	
Document Number:	REV:
Date: 02.11.2021 12:59	Sheet: 1/1