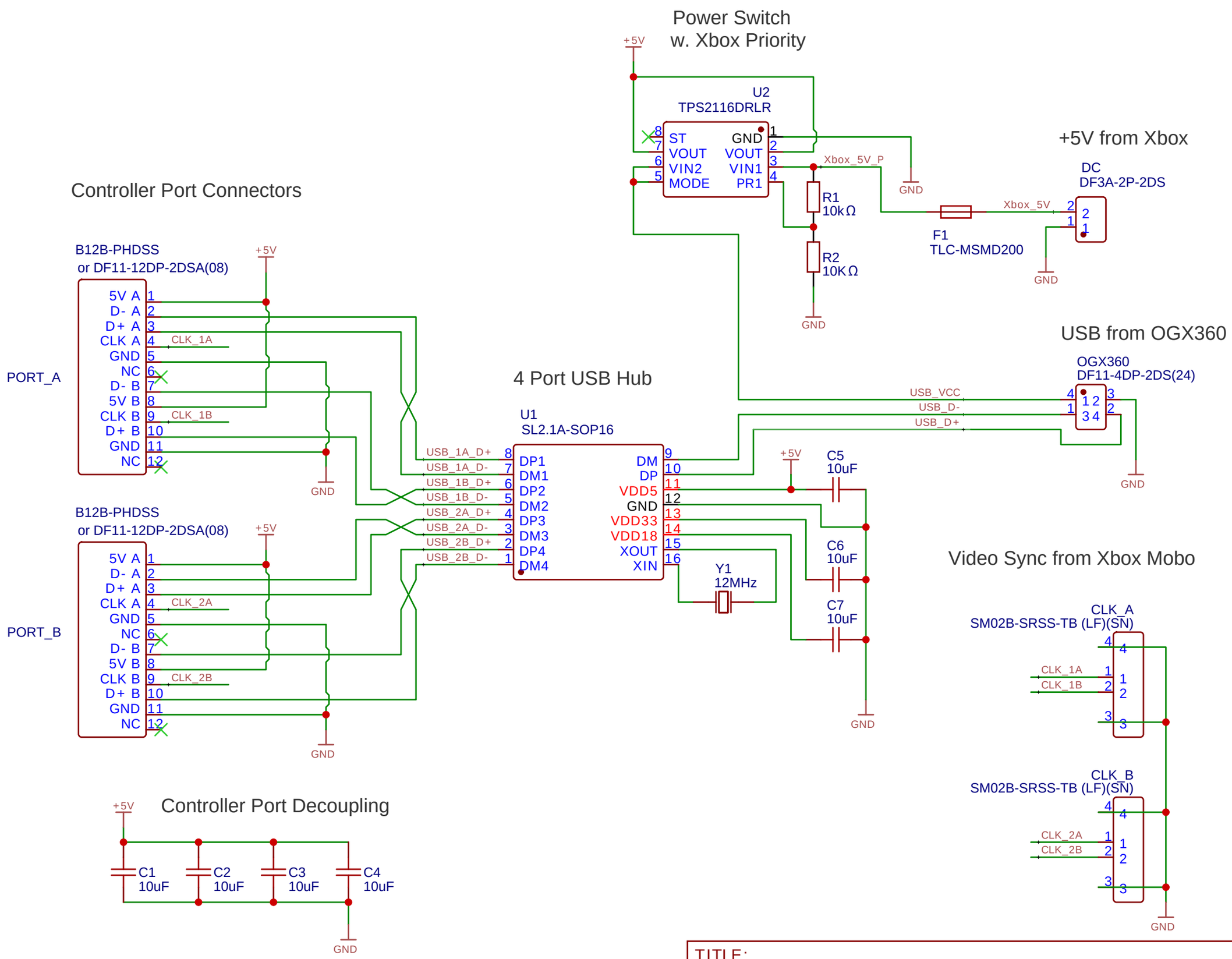

TITLE: OGXHUB	REV: 1.2
嘉立创EDA	Company: Wired Opposite
	Sheet: 1/1
	Date: 2023-01-07 Drawn By: softmachine