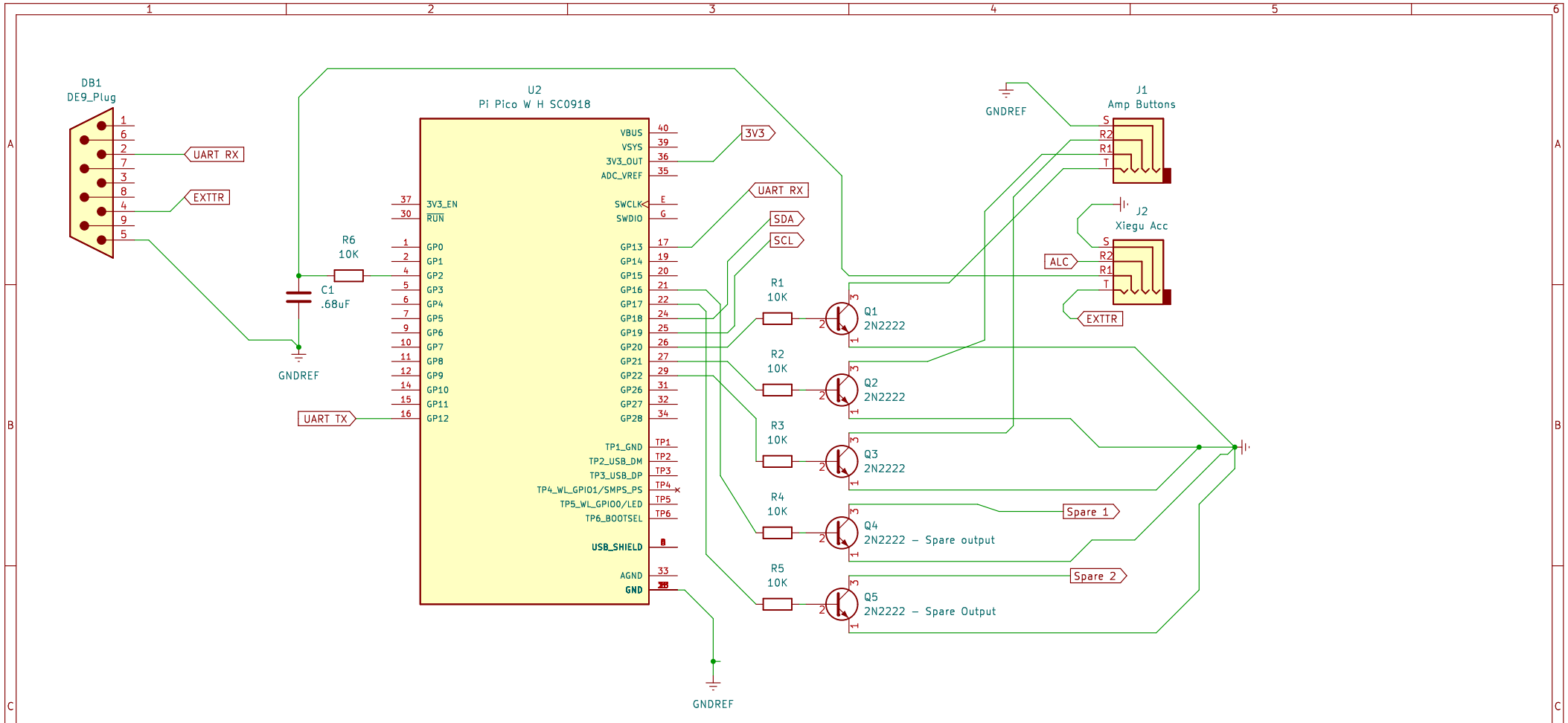

Note: Schematic Not Ready for PCB Fabrication

Sheet: /
File: hl2-xpa.kicad_sch

Title: HL2 to XPA125b Interface by KP4RX

Size: A4	Date: August 30, 2023	**Rev:** 1.0
KiCad E.D.A. kicad 7.0.6-0		Id: 1/1