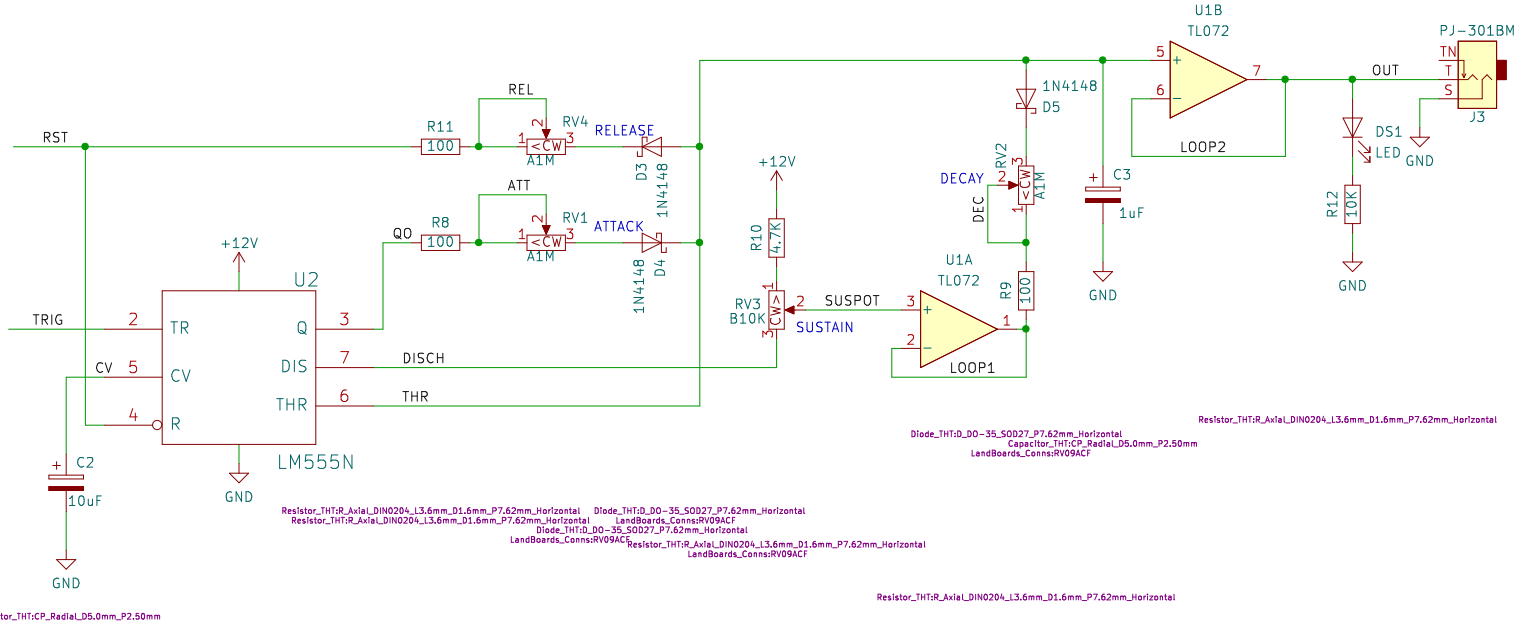

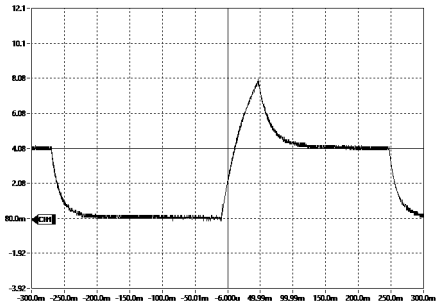

ADDED IN REWORK

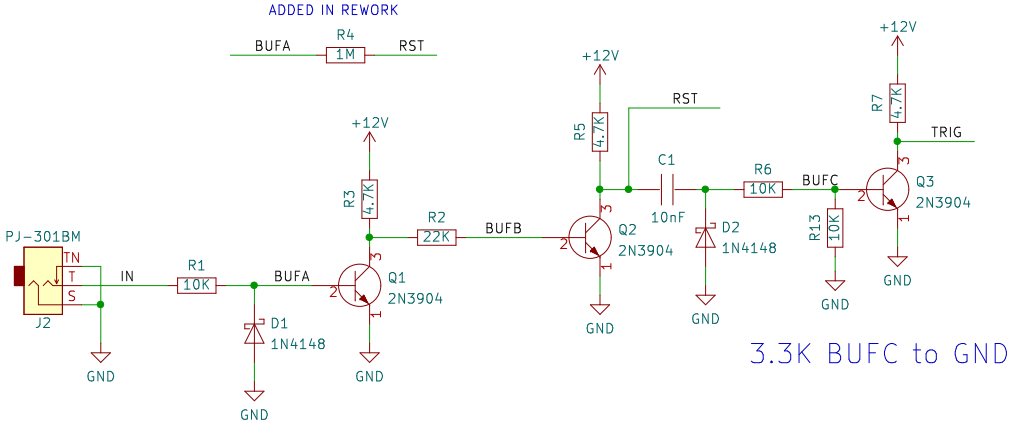

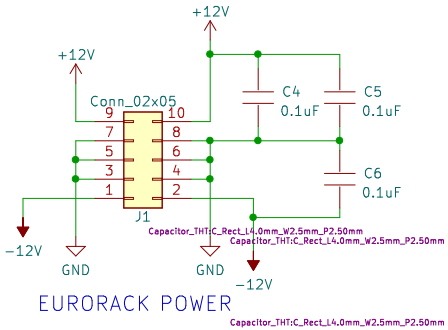

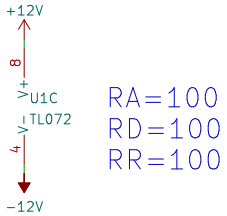

RA=100
RD=100
RR=100

https://www.schmitzbits.de/adsr.html
The Fastest Envelope in the West

Sheet: File: ER-ADSR-555-01.kicad_sch		
Title: ADSR GENERATOR		
Size: A	Date: 2023-01-30	Rev: 3
KiCad E.D.A. kicad (7.0.0)		Id: 1/1