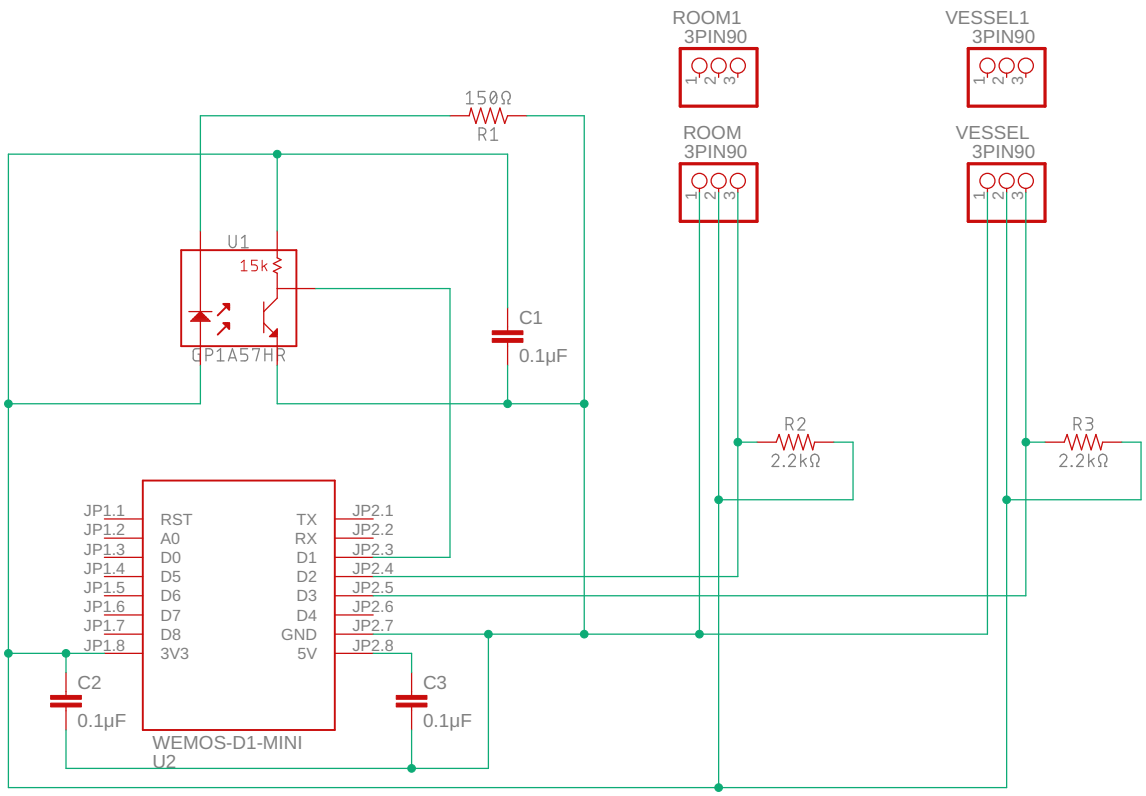

TITLE: Brew-Bubbles	
Document Number:	REV:
Date: 9/11/2019 4:34 PM	Sheet: 1/1