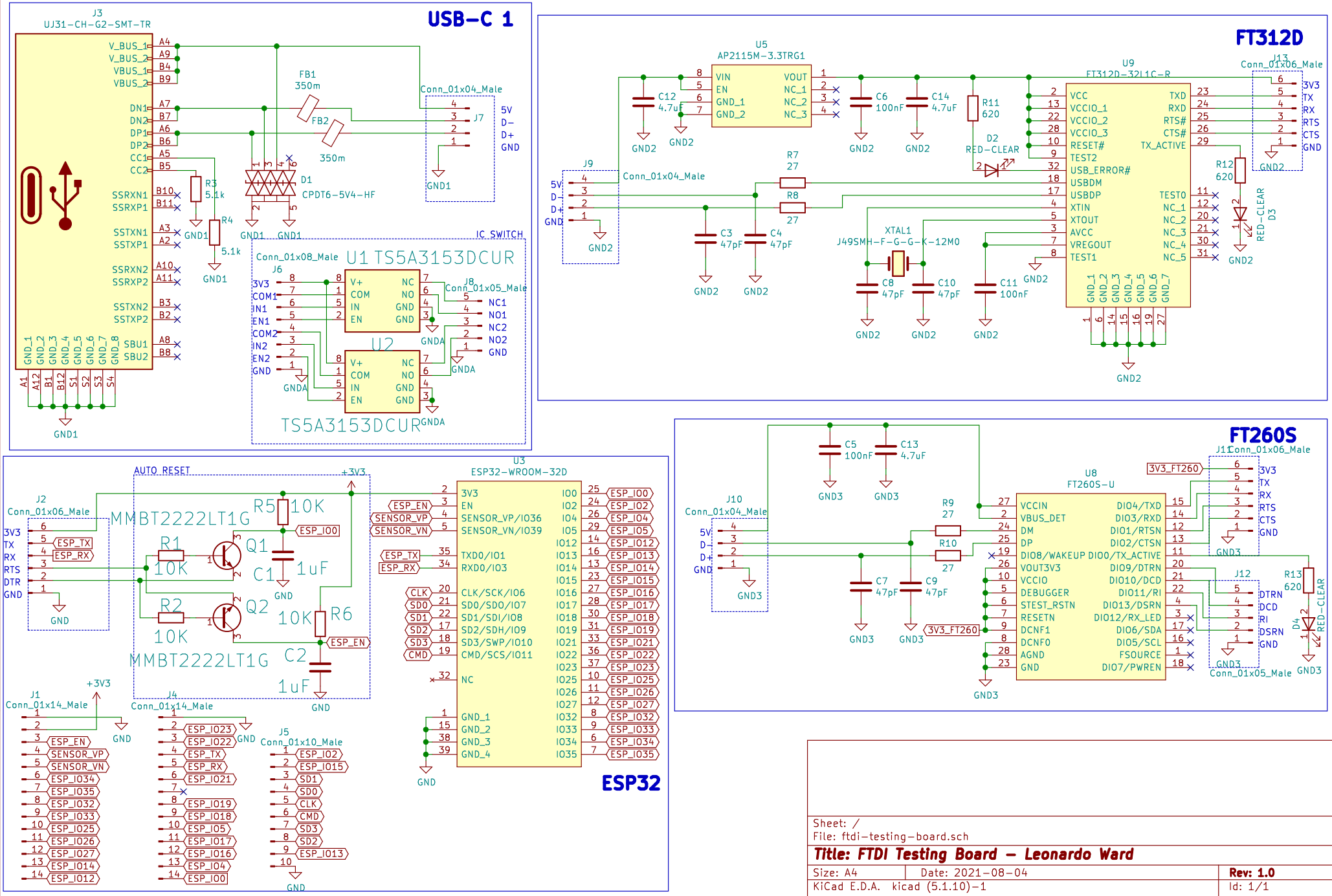

Sheet: /
File: ftdi-testing-board.sch

Title: FTDI Testing Board - Leonardo Ward

Size: A4	Date: 2021-08-04	Rev: 1.0
KiCad E.D.A. kicad (5.1.10)-1		Id: 1/1