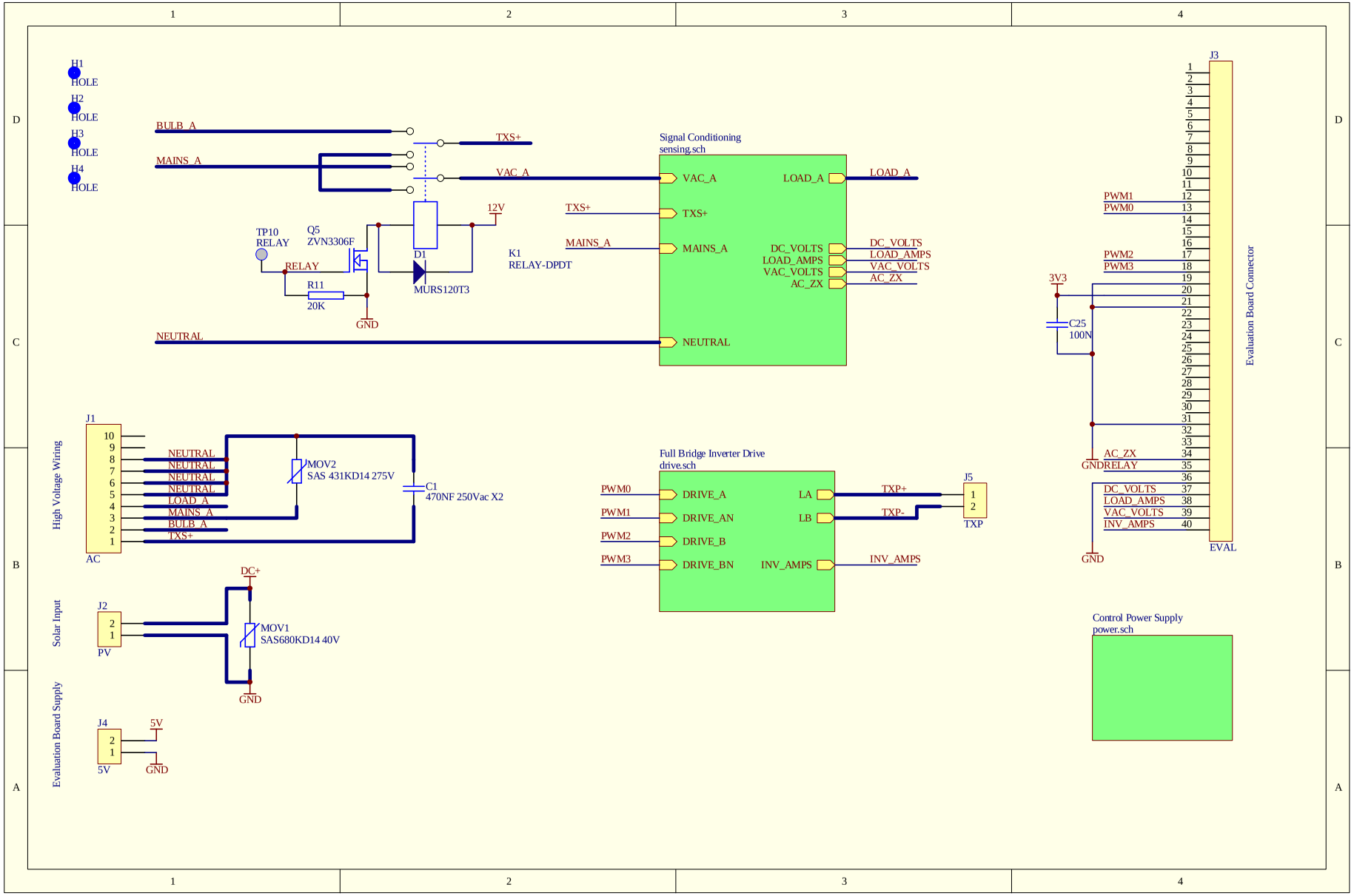
H1
HOLE
H2
HOLE
H3
HOLE
H4
HOLE
BULB_A
MAINS_A
TXS+
VAC_A
12V
TP10
RELAY
Q5
ZVN3306F
RELAY
R11
20K
GND
D1
MURS120T3
K1
RELAY-DPDT
NEUTRAL
Signal Conditioning
sensing.sch
VAC_A
TXS+
MAINS_A
NEUTRAL
LOAD_A
DC_VOLTS
LOAD_AMPS
VAC_VOLTS
AC_ZX
J3
Evaluation Board Connector
PWM1
PWM0
PWM2
PWM3
3V3
C25
100N
AC_ZX
RELAY
DC_VOLTS
LOAD_AMPS
VAC_VOLTS
INV_AMPS
EVAL
High Voltage Wiring
J1
AC
NEUTRAL
LOAD_A
MAINS_A
BULB_A
TXS+
MOV2
SAS 431KD14 275V
C1
470NF 250Vac X2
Full Bridge Inverter Drive
drive.sch
PWM0
PWM1
PWM2
PWM3
DRIVE_A
DRIVE_AN
DRIVE_B
DRIVE_BN
LA
LB
INV_AMPS
TXP+
TXP-
J5
TXP
Solar Input
J2
PV
DC+
MOV1
SAS680KD14 40V
Evaluation Board Supply
J4
5V
Control Power Supply
power.sch

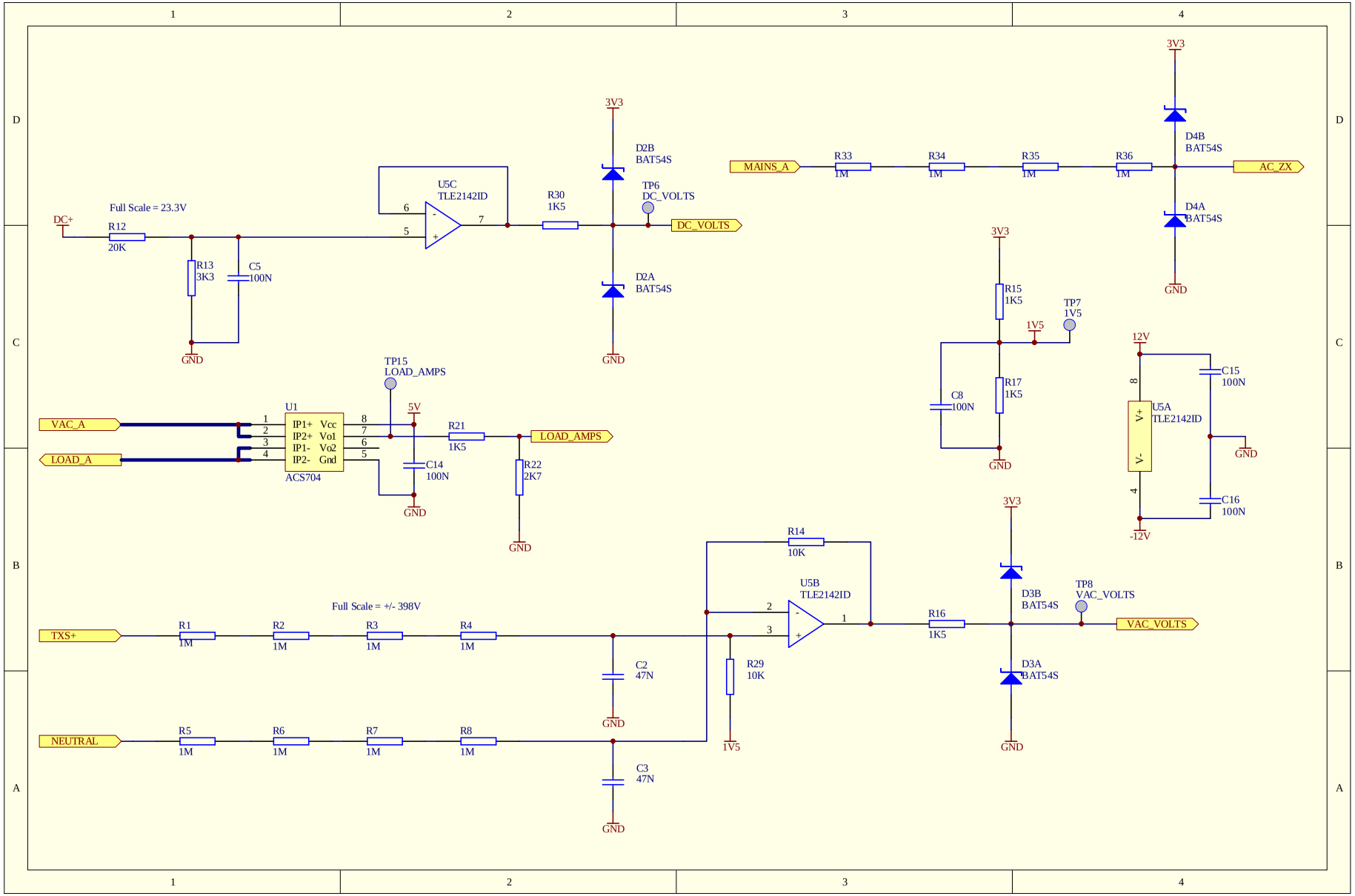
DC+
Full Scale = 23.3V
R12
20K
R13
3K3
C5
100N
GND
U5C
TLE2142ID
R30
1K5
3V3
D2B
BAT54S
TP6
DC_VOLTS
DC_VOLTS
D2A
BAT54S
MAINS_A
R33
1M
R34
1M
R35
1M
R36
1M
D4B
BAT54S
AC_ZX
D4A
BAT54S
R15
1K5
1V5
TP7
1V5
C8
100N
R17
1K5
12V
C15
100N
U5A
TLE2142ID
V+
V-
C16
100N
-12V
TP15
LOAD_AMPS
5V
U1
VAC_A
LOAD_A
IP1+ Vcc
IP2+ Vo1
IP1- Vo2
IP2- Gnd
ACS704
C14
100N
R21
1K5
LOAD_AMPS
R22
2K7
R14
10K
U5B
TLE2142ID
R16
1K5
D3B
BAT54S
TP8
VAC_VOLTS
VAC_VOLTS
D3A
BAT54S
Full Scale = +/- 398V
TXS+
R1
1M
R2
1M
R3
1M
R4
1M
C2
47N
R29
10K
1V5
NEUTRAL
R5
1M
R6
1M
R7
1M
R8
1M
C3
47N

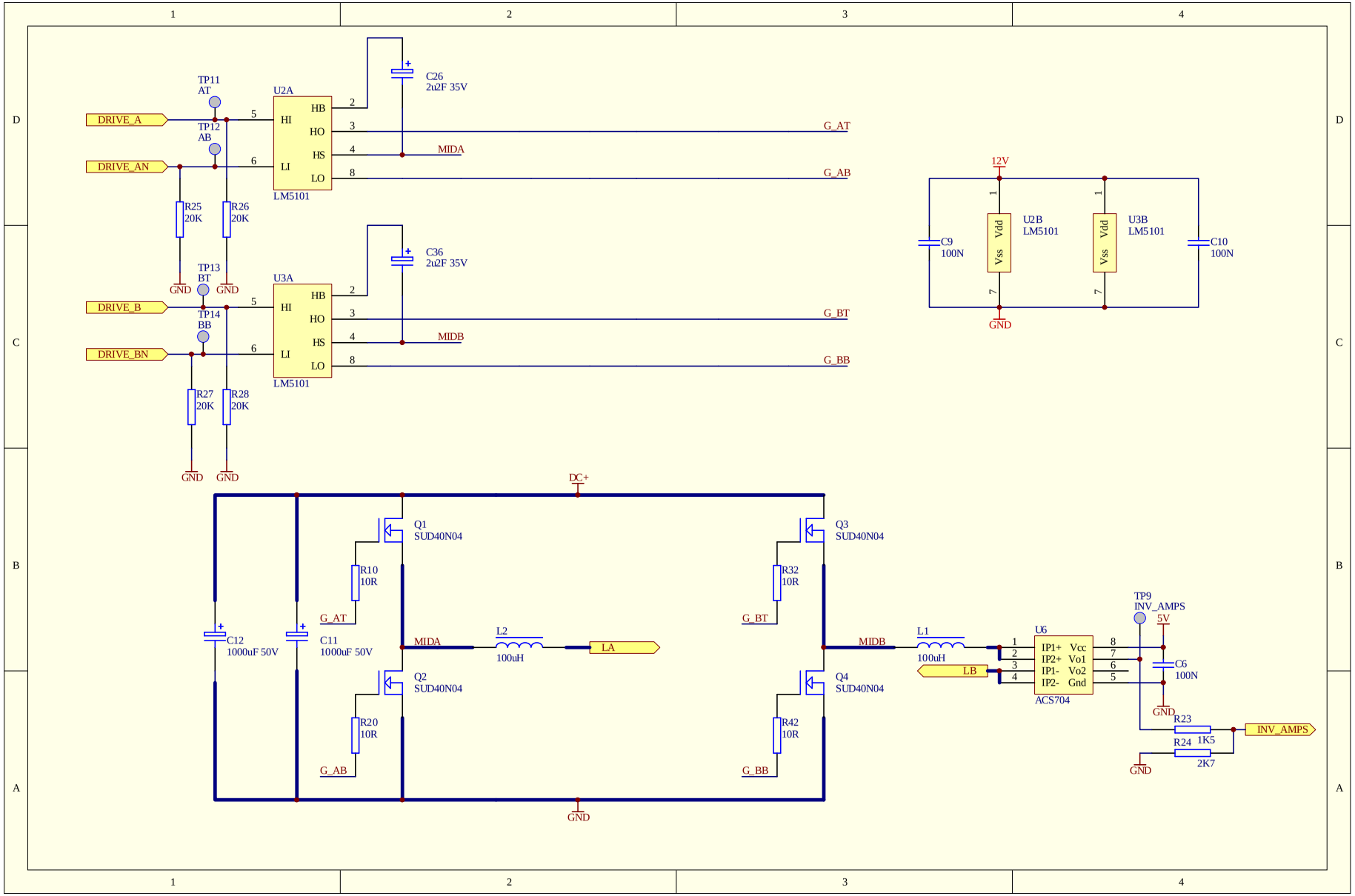
DRIVE_A
DRIVE_AN
DRIVE_B
DRIVE_BN
TP11 AT
TP12 AB
TP13 BT
TP14 BB
U2A
U3A
HI
LI
HB
HO
HS
LO
LM5101
C26 2u2F 35V
C36 2u2F 35V
MIDA
MIDB
G_AT
G_AB
G_BT
G_BB
R25 20K
R26 20K
R27 20K
R28 20K
GND
12V
U2B LM5101
U3B LM5101
Vdd
Vss
C9 100N
C10 100N
DC+
Q1 SUD40N04
Q2 SUD40N04
Q3 SUD40N04
Q4 SUD40N04
R10 10R
R20 10R
R32 10R
R42 10R
C12 1000uF 50V
C11 1000uF 50V
L2 100uH
L1 100uH
LA
LB
U6
IP1+ Vcc
IP2+ Vo1
IP1- Vo2
IP2- Gnd
ACS704
TP9 INV_AMPS
5V
C6 100N
R23 1K5
R24 2K7
INV_AMPS

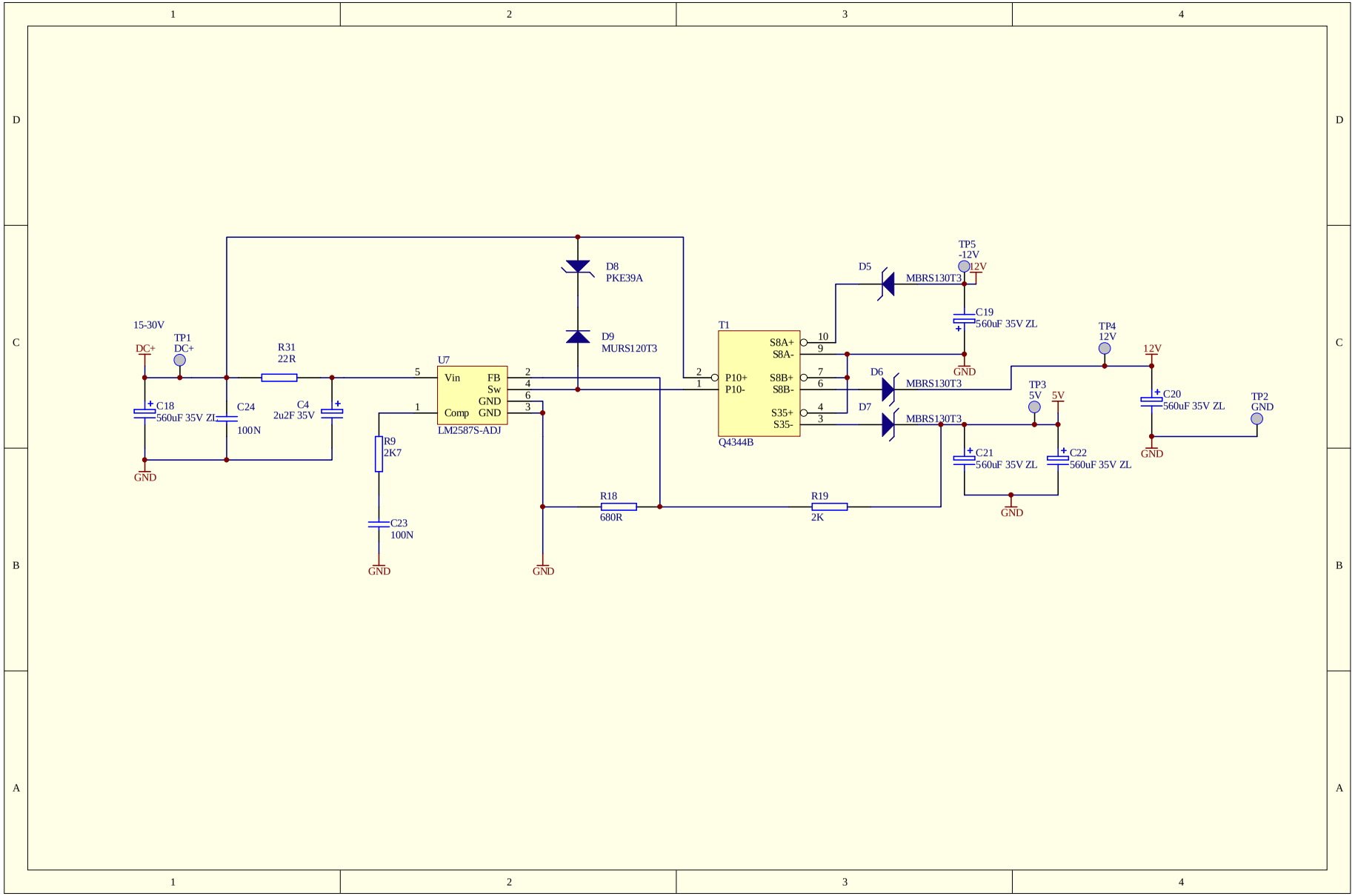
15-30V
DC+
TP1
DC+
C18
560uF 35V ZL
C24
100N
R31
22R
C4
2u2F 35V
GND
U7
Vin
FB
Sw
GND
Comp
GND
LM2587S-ADJ
R9
2K7
C23
100N
D8
PKE39A
D9
MURS120T3
R18
680R
R19
2K
T1
P10+
P10-
S8A+
S8A-
S8B+
S8B-
S35+
S35-
Q4344B
D5
MBRS130T3
D6
MBRS130T3
D7
MBRS130T3
TP5
-12V
12V
C19
560uF 35V ZL
TP4
12V
TP3
5V
5V
C21
560uF 35V ZL
C22
560uF 35V ZL
C20
560uF 35V ZL
TP2
GND